FITSTOP – EARLWOOD
(218smq approx.)
335 Homer Street
Earlwood NSW 2206

FITSTOP.

DRAWING SCHEDULE

100 COVER SHEET
DRAWINGS SCHEDULE – FINISHES
101 GENERAL & ELECTRICAL NOTES
102 LOCATION PLAN
103 EXISTING/DEMOLITION PLAN (PART A)
104 EXISTING/DEMOLITION PLAN (PART B)
105 PROPOSED FLOOR LAYOUT (PART A)
106 PROPOSED FLOOR LAYOUT (PART B)
107 REFLECTED CEILING PLAN – INCLUDING LIGHTING (PART A)
108 REFLECTED CEILING PLAN – INCLUDING LIGHTING (PART B)
109 ELECTRICAL PLAN – INCLUDING POWER & DATA (PART A)
110 ELECTRICAL PLAN – INCLUDING POWER & DATA (PART B)
111 HYDRAULICS LAYOUT
112 SHOPFRONT ELEVATION (A)
113 INTERNAL ELEVATIONS (B), (C) + (D)
114 INTERNAL ELEVATIONS (E) + (F)
115 INTERNAL ELEVATIONS (G), (H) + (i)
116 TYPICAL DETAILS – RECEPTION
117 TYPICAL DETAILS – KITCHENETTE
118 TYPICAL DETAILS – LCD SCREEN
119 TYPICAL DETAILS – MERCHANDISE UNIT (TYPE B)
120 TYPICAL AMBULANT TOILET/SHOWER COMBO – DETAILS 1 OF 2
121 TYPICAL AMBULANT TOILET/SHOWER COMBO – DETAILS 2 OF 2
122 TYPICAL ACCESSIBLE TOILET/SHOWER COMBO – DETAILS 1 OF 2
123 TYPICAL ACCESSIBLE TOILET/SHOWER COMBO – DETAILS 2 OF 2

FINISHES SCHEDULE:

FLOORING/WALLS

(F1) FEATURE BLACK TURF LOOK
NAME: COOLPLAY – COLOUR: BLACK
SIZE: 3.71M ROLL (USEABLE 3600mm)
SUPPLIER: SYNLawn
PH.: 1300 796 529
EMAIL: syn-syd@synlawn.com.au OR syn-bris@synlawn.com.au

(F2) SHEET RUBBER FLOORING (BLACK) – TO BE PRE-SEALED
NAME: REGUPOL EVERROLL CORE 8mm THICK
COLOUR: "MONS"
SIZE: 1250mm WIDE ROLL
SUPPLIER: REGUPOL PH.: (02) 4624 0050
CONTACT: BEN JARRETT Mob: 0420 752 479
EMAIL: ben@regupol.com.au

(F3) **ELEVATED OPTION**
FEATURE WHITE TURF LOOK (FOR LETTER INSERTS)
NAME: COOLPLAY – COLOUR: WHITE
SIZE: 3.71M ROLL (USEABLE 3600mm)
SUPPLIER: SYNLawn
PH.: 1300 796 529
EMAIL: syn-syd@synlawn.com.au OR syn-bris@synlawn.com.au

(F4) FLOOR & WALL TILE
600x600x9.5mm FOR WALLS/SPLASHBACKS/FLOORING/SKIRTING
(SKIRTING 150mm HIGH WHEN REQUIRED)
WET AREAS: ALLOW FOR WATERPROOFING TO AS3740 WITH WATERPROOFING MEMBRANES AS REQUIRED TO AS/NZS 4858
NAME: "URBAN CEMENT NATURAL MATT" SKU:713966 (P4)
GROUT COLOUR TO MATCH
SUPPLIER: JOHNSON TILES
CONTACT: LEANNE CARLTON – PH: 0429 651 985
(APPOINTED CONTRACTOR TO INITIALLY CONTACT FITSTOP PROJECT MANAGER TO ACCESS SECURED FIXED PRICING)

PAINT

(P1) DULUX "WHITE ON WHITE" SW1E2 (FLAT FINISH)
(P2) DULUX "WHITE ON WHITE" SW1E2 (LOW SHEEN)
(P3) DULUX "WHITE ON WHITE" SW1E2 (GLOSS FINISH)
(P4) DULUX "WHITE ON WHITE" SW1E2 (SEMI-GLOSS FINISH)
(P5) DULUX "BLACK" SG6G9 (LOW SHEEN)
(P6) RESENE "KELP CC" G43-024-106 (GLOSS FINISH)
(P7) RESENE "KELP CC" G43-024-106 (LOW SHEEN)
(P8) DULUX "CEILING WHITE" (ALL CEILING AREAS)
(P9) DULUX "MAXIMUS" SG5B9 (LOW SHEEN)
(PC1) POWDERCOAT FINISH – STANDARD BLACK
(PC2) POWDERCOAT FINISH – STANDARD WHITE

LAMINATES

(L1) FEATURE LAMINATE
COLOUR: "POLAR WHITE" #205 NATURAL FINISH
SUPPLIER: LAMINEX

(L2) FEATURE LAMINATE
COLOUR: "CHARCOAL" #461 NATURAL FINISH
SUPPLIER: LAMINEX

(L3) FEATURE LAMINATE
COLOUR: "BLACK" #460 NATURAL FINISH
SUPPLIER: LAMINEX

(L4) **RECEPTION COUNTER**
LAMINEX 16mm PREFINISHED BOARD
COLOUR: 'ALASKAN' NATURAL FINISH
1mm PVC EDGING TO MATCH

(L5) **ELEVATED OPTION**
BATHROOM DOOR LAMINATE
COLOUR: "WHITEWASH OAK" #041 NATURAL FINISH
SUPPLIER: LAMINEX

ALUMINIUM EXTRUSIONS

(E1) BLACK EXTRUSION (TO WALL MOUNTED MIRRORS – RIG/CAGE AREA)
RANGE: AVA ALLTRIM ALUMINIUM EXTRUSION
CODE: AMB12 – 12mm x 3000mm
COLOUR: BLACK MATTE
SUPPLIER: AMARKGROUP.COM.AU

(E2) BLACK 15mm or 20mm ALUMINIUM ANGLES
RANGE: METAL MATE – 1.5mm THICK (3m LENGTHS)
COLOUR: STANDARD POWDERCOAT BLACK
SUPPLIER: BUNNINGS

MISCELLANEOUS

(T1) **ELEVATED OPTION**
ALUMINIUM COMPOSITE PANEL (WHITE)
COLOUR: TO MATCH P1 – 80% GLOSS LEVELS

(T2) VJ BOARD WALL LINING (VERTICAL JOINT DIRECTION)
9mm THICK – JOINTS @ 150mm CENTRES
(PANELS ARE 2400x1200)
COLOUR: TO BE PAINTED AS NOMINATED ON ELEVATIONS
NAME: EASY GROOVE 150, PRIMED – SUPPLIER: BUNNINGS

(T3) **BY ALPHAFIT FOR RIG WALLS**
LAMINEX 16mm PREFINISHED BOARD
COLOUR: 'ALASKAN' NATURAL FINISH
ALLOW BLACK EDGING TO ALL EDGES OF EACH PANEL
NOTES: INVISIBLE FIXINGS FROM BACK SIDE TO MANUFACTURER'S WRITTEN SPECIFICATION

MIRROR

(MR) 6mm THICK SILVER SAFETY GLASS MIRROR (COPPER FREE)
WITH POLISHED EDGES
DIMENSIONS – REFER ELEVATIONS
ALL MIRRORS TO BE SURFACE MOUNTED

SKIRTING

(SK) WALL SKIRTING
100mm FLAT ALUMINIUM SKIRTING C/A 3600
SUPPLIER: BRIS ALUMINIUM – PH.: 1300 274 701

©2025 – THESE DESIGNS, DRAWINGS & SPECIFICATIONS ARE COPYRIGHT & CONFIDENTIAL AND THE PROPERTY OF VECA Group AND MUST NOT BE USED, REPRODUCED OR COPIED WHOLLY OR IN PART WITHOUT THE PERMISSION OF VECA Group. THESE DRAWINGS ARE DESIGN ONLY. SELECTED CONTRACTOR TO PRODUCE ITS OWN SHOP DRAWINGS FOR CONSTRUCTION.

ALL DIMENSIONS MUST BE CHECKED ON SITE BEFORE COMMENCEMENT OF CONSTRUCTION OR MANUFACTURING OF ANY ITEM. USE FIGURED DIMENSIONS IN PREFERENCE TO SCALED DIMENSIONS. ALL WORKS SHALL COMPLY WITH RELEVANT LOCAL HEALTH & COUNCIL REQUIREMENTS, LOCAL BUILDING REGULATIONS AND RELEVANT AUSTRALIAN CODES AND STANDARDS.
ANY DISCREPANCIES TO BE REPORTED TO VECA Group FOR CORRECTION PRIOR TO ANY WORK ON SITE.

ISSUE	AMENDMENTS	DATE
A	LANDLORD/CLIENT APPROVAL	16.04.2025

CLIENT:
FITSTOP.
FITSTOP Australia
51 Manilla Street
EAST BRISBANE QLD 4169
AUSTRALIA
Mobile: 0409 907 269 (Nicole Donohue)
EMAIL: nicole.donohue@fitstop.com

DESIGNER:
VECA Group
ABN 92 473 736 223
MOBILE: 0401 657 190 (Eric Lacour)
Registered Building Practitioner (VIC) - # CDP-ID 54352
Building Services Provider/Building Designer Ltd. (TAS)
License #484351416
EMAIL: veca@vecagroup.com
WEB: https://www.vecagroup.com

PROJECT	FITSTOP EARLWOOD 335 Homer Street Earlwood NSW 2206 (Approx. 218sqm)
DRAWING	**COVER SHEET FINISHES**
DATE	16th April 2025
DESIGNED	EL
DRAWN	EB
SCALE	N/A (A2 SHEET SIZE)
PROJECT No.	FI.EA.3790
DRAWING No.	VECA_FIEA3790_ **100A**

GENERAL NOTES:

THESE DESIGNS, DRAWINGS & SPECIFICATIONS ARE COPYRIGHT & THE PROPERTY OF VECA GROUP & MUST NOT BE USED, REPRODUCED OR COPIED WHOLLY OR IN PART WITHOUT THE PERMISSION OF VECA GROUP

IF IN DOUBT PLEASE CONTACT VECA GROUP FOR CLARIFICATION

ALL DIMENSIONS MUST BE CHECKED ON SITE BEFORE COMMENCEMENT OF CONSTRUCTION OR MANUFACTURING OF ANY ITEM. READ ALL DRAWINGS & SPECIFICATIONS THOROUGHLY

ALL FFL'S & DIMENSIONS ARE BASED ON LANDLORD INFORMATION – VERIFY ON SITE BEFORE COMMENCEMENT OF ANY WORKS

DO NOT SCALE DRAWINGS. USE FIGURED DIMENSIONS IN PREFERENCE TO SCALED DIMENSIONS. IT IS THE MAIN CONTRACTOR'S RESPONSIBILITY TO CONFIRM ALL SITE CONDITIONS & REQUIREMENTS

FAILURE TO COMPLY WITH DRAWINGS & SPECIFICATIONS COULD RESULT IN ALTERATIONS BEING MADE AT A COST TO THE MAIN CONTRACTOR

ALL BUILDING WORK TO COMPLY WITH THE CURRENT STATE BUILDING ACT, THE BUILDING CODE OF AUSTRALIA ("BCA", AKA NCC), THE AUSTRALIANS STANDARDS ("AS" OR "AS/NZS") AND ALL STANDARD BUILDING REGULATIONS

THE MAIN CONTRACTOR IS TO ENSURE STAFF INDUCTION & THE LIKE IS COMPLETED PRIOR TO START OF TENANCY FITOUT. CHECK LANDLORD'S REQUIREMENTS

THE MAIN CONTRACTOR IS TO COMPLY WITH CURRENT RELEVANT HEALTH & SAFETY REGULATIONS AT ALL TIME (WORK HEALTH & SAFETY ACT 2011)

THE MAIN CONTRACTOR IS DIRECTED TO CONTACT THE LANDLORD CONSULTANT ENGINEER PRIOR TO ANY DEMOLITION. CONFIRM WITH LANDLORD PRIOR TO CHASING FLOOR SLAB TO DETERMINE ANY STRUCTURAL LIMITATIONS ON SIZE & LOCATION OF CHASES WHERE APPLICABLE

ALL WORKS ARE TO BE INDEPENDENT OF MALL STRUCTURE & INTERTENANCY WALLS

THE MAIN CONTRACTOR IS TO MAKE ADEQUATE PROVISION IN THE FITOUT FOR ALL CONTROL & EXPANSION JOINTS WITHIN THE TENANCY. COORDINATE WITH LANDLORD & DESIGNER FOR TREATMENT

FIRE SPRINKLERS & A/C REGISTERS/GRILLES, IF SHOWN, ARE INDICATIVE ONLY (BY LANDLORD). ANY ADDITIONAL A/C (INCLUDING RELIEF) REQUIREMENTS TO BE COORDINATED WITH THE LANDLORD ENGINEER'S REQUIREMENTS

ALL PARTITIONS TO BE FORMED IN TIMBER/STEEL STUDS WITH 10mm OR 13mm THICK FLUSHSET PLASTERBOARD LINING (AS REQUIRED). GENERALLY, ALL PLASTERBOARD WORKS TO BE FLUSHSET, TAP & SAND. NO CORNER STRIPS OR THE LIKE WILL BE ACCEPTABLE

ALL AMENITIES TO BE SHEETED WITH 6mm VILLABOARD OR SIMILAR APPROVED

WET AREAS TO BE IMPERVIOUS TO WATER, I.E. WALL SURFACES AND SUBSTRATES BEHIND ANY BASIN, SINK, SHOWERS ETC IF WITHIN 75mm OF A WALL TO A HEIGHT OF 150mm ABOVE THE FIXTURE. PROVIDE WATERPROOF MEMBRANE (TO AS/NZS 4858:2004) TO FLOOR/WALLS AS REQUIRED. ALL WATERPROOFING TO AS3740:2021.

SIGNAGE & BULKHEADS TO BE SUPPORTED FROM THE BUILDING STRUCTURE (INDEPENDENTLY OF LESSOR'S CEILING & IN-CEILING SERVICES). PROVIDE A STRUCTURAL ENGINEER CERTIFICATE OF COMPLIANCE ON COMPLETION OF TENANCY FITOUT & PRIOR TO OPENING FOR TRADING

ALL FLOOR FINISHES MUST BE FINISHED FLUSH WITH ADJACENT FINISH. USE 3mm CLEAR ANODISED FINISH ALUMINIUM ANGLE (OR SIMILAR APPROVED) TO ALL JOINTS TO PROVIDE A LEVEL JUNCTION. NO COVER STRIPS OR THE LIKE WILL BE ACCEPTABLE. ANY TRIPPING HAZARD IS TO BE AVOIDED

BASE BUILDING FIRE SAFETY SYSTEMS ARE NOT TO BE AFFECTED/OBSTRUCTED BY ANY PART OF TENANCY FITOUT. ENSURE COMPLIANCE TO THE PLANNING AUTHORITY, AND FIRE SERVICES REGULATIONS. PORTABLE FIRE EXTINGUISHERS, BLANKETS AND ASSOCIATED SIGNAGE TO COMPLY WITH AS/NZS 1850-2009, AS/NZS 1841.1-2007 AND AS 2444-2001. OWNER TO THEREFORE ENSURE COMPLIANCE WITH AS 1851-2012 AND AS 1670.4-2024. EVACUATION DIAGRAM(S) AND EMERGENCY EVACUATION PLAN TO BE PROVIDED AS PER AS 3745-2010 (BY OWNER, WITHIN ONE MONTH OF OPENING)

ALL HYDRAULICS WORKS TO BE EXECUTED AS PER ENGINEERED HYDRAULICS LAYOUTS (BY OTHERS). ENSURE WATER FEED IS SIZED AS REQUIRED TO PROVIDE ADEQUATE PRESSURE TO ALL HYDRAULIC POINTS. SUPPLY AND INSTALL OF ALL PLUMBING FIXTURES SHALL BE IN COMPLIANCE WITH AS/NZS 3500 SET (PARTS 0-4)-2021 "PLUMBING AND DRAINAGE SET". WHERE PRACTICABLE SERVICE PIPES SHOULD BE CONCEALED IN ACCORDANCE WITH THE BCA

ANY SPECIFIC REQUIREMENTS IMPLEMENTED BY ANY LOCAL AUTHORITIES ARE TO BE CARRIED OUT AS INSTRUCTED

LOCATION OF ACCESS PANELS TO BE DETERMINED ON SITE BASED ON SERVICES LOCATION

THE BCA REQUIRES ACCESS FOR PEOPLE WITH DISABILITIES TO COMPLY WITH AS 1428.1 -2021 AND AS 1428.4.2:2018.

THE BCA REQUIRES ALL GLAZING TO COMPLY WITH AS 1288-2021 AND AS 2047-2014, AND DECALS TO COMPLY WITH AS 1428.1-2021. SILICONE JOINTS TO GLASS JUNCTIONS TO BE NEAT & CLEAN. ALL GLASS TO BE INSTALLED SO THAT IT CAN BE REPLACED AT A LATER DATE.

PART J7 OF THE BCA REQUIRES ALL ARTIFICIAL LIGHTING TO COMPLY WITH BCA PART J7, AND SPECIFICATION J7 OF THE BCA.

ALL NEW FLOOR LININGS WILL ACHIEVE COMPLIANCE WITH THE SLIP-RESISTANCE REQUIREMENTS OF AS 4586-2013 & HB198-2014.

ALL AMENITIES DOORS WILL BE FITTED WITH LIFT-OFF HINGES

CLIENT/LANDLORD APPROVED DRAWINGS TO BE ON SITE AT ALL TIMES DURING CONSTRUCTION

ELECTRICAL NOTES:

ALL ELECTRICAL WORKS TO BE COORDINATED WITH LIGHTING ENGINEER

CHECK HEAT LOADINGS WITH A/C CONSULTANT

ADDITIONAL SERVICES TO BE INSTALLED AS PER LANDLORD'S & LOCAL AUTHORITY REQUIREMENTS & TO SATISFY AUSTRALIAN STANDARDS

CONFIRM SIZE OF SWITCHBOARD IS ADEQUATE FOR STORE REQUIREMENTS – RELOCATE AND/OR UPGRADE SWITCHBOARD AS REQUIRED – INSTALL SAFETY SWITCH

ELECTRICAL SWITCHBOARDS LOCATED IN THE PATH OF TRAVEL TO EXITS TO BE ENCLOSED IN METAL OR OTHER NON-COMBUSTIBLE CABINETS WITH SMOKE PROOF DOORS

CONFIRM EXTENT AND LOCATION OF REQUIRED GPO'S ALONG TENANCY WALLS & WITHIN COUNTERS & DISPLAY CASES

PROVIDE FIT FOR PURPOSE LIGHT & POWER FROM SWITCHBOARD TO ALL POSITIONS NOMINATED

ELECTRICIAN TO PROVIDE RCD TO POWERBOARD AND INDIVIDUALLY NAME GPO'S TO MATCH THE SWITCHBOARD

LOCATE TRANSFORMERS IN CEILING SPACE ADJACENT TO RELEVANT ELECTRICAL COMPONENTS

EMERGENCY LIGHTING & EXIT SIGNS TO COMPLY WITH BCA PART E4 & AS2293.1:2018 – CERTIFICATE OF COMPLIANCE TO BE OBTAINED – ONLY EDGE LIT EXIT SIGNS ARE TO BE INSTALLED – BOXED OPAL ACRYLIC TYPES WILL NOT BE PERMITTED – EXIT SIGNS TO BE MOUNTED AT A HEIGHT OF 2.5m OR AS OTHERWISE APPROVED BY THE PRIVATE BUILDING CERTIFIER

PROVIDE EXTRA CONCEALED GRID FOR LIGHT FITTINGS WHERE APPLICABLE – SUPPORT FROM STRUCTURE OVER

©2025 – THESE DESIGNS, DRAWINGS & SPECIFICATIONS ARE COPYRIGHT & CONFIDENTIAL AND THE PROPERTY OF VECA Group AND MUST NOT BE USED, REPRODUCED OR COPIED WHOLLY OR IN PART WITHOUT THE PERMISSION OF VECA Group. THESE DRAWINGS ARE DESIGN ONLY. SELECTED CONTRACTOR TO PRODUCE ITS OWN SHOP DRAWINGS FOR CONSTRUCTION.
ALL DIMENSIONS MUST BE CHECKED ON SITE BEFORE COMMENCEMENT OF CONSTRUCTION OR MANUFACTURING OF ANY ITEM. USE FIGURED DIMENSIONS IN PREFERENCE TO SCALED DIMENSIONS. ALL WORKS SHALL COMPLY WITH RELEVANT LOCAL HEALTH & COUNCIL REQUIREMENTS, LOCAL BUILDING REGULATIONS AND RELEVANT AUSTRALIAN CODES AND STANDARDS.
ANY DISCREPANCIES TO BE REPORTED TO VECA Group FOR CORRECTION PRIOR TO ANY WORK ON SITE.

ISSUE	AMENDMENTS	DATE
A	LANDLORD/CLIENT APPROVAL	16.04.2025

CLIENT:
FITSTOP.
FITSTOP Australia
51 Manilla Street
EAST BRISBANE QLD 4169
AUSTRALIA
Mobile: 0409 907 269 (Nicole Donohue)
EMAIL: nicole.donohue@fitstop.com

DESIGNER:
VECA Group
ABN 92 473 736 223
MOBILE: 0401 657 190 (Eric Lacour)
Registered Building Practitioner (VIC) - # CDP-JD 54352
Building Services Provider/Building Designer Ltd. (TAS)
License #484351416
EMAIL: veca@vecagroup.com
WEB: https://www.vecagroup.com

PROJECT	FITSTOP EARLWOOD 335 Homer Street Earlwood NSW 2206 (Approx. 218sqm)
DRAWING	GENERAL NOTES ELECTRICAL NOTES
DATE	16th April 2025
DESIGNED	EL
DRAWN	EB
SCALE	N/A (A2 SHEET SIZE)
PROJECT No.	FI.E.A.3790
DRAWING No.	VECA_FIEA3790_ 101A

FITSTOP – EARLWOOD
(218smq approx.)
335 HOMER STREET
Earlwood NSW 2206

LOCATION PLAN
N.T.S. @ A2

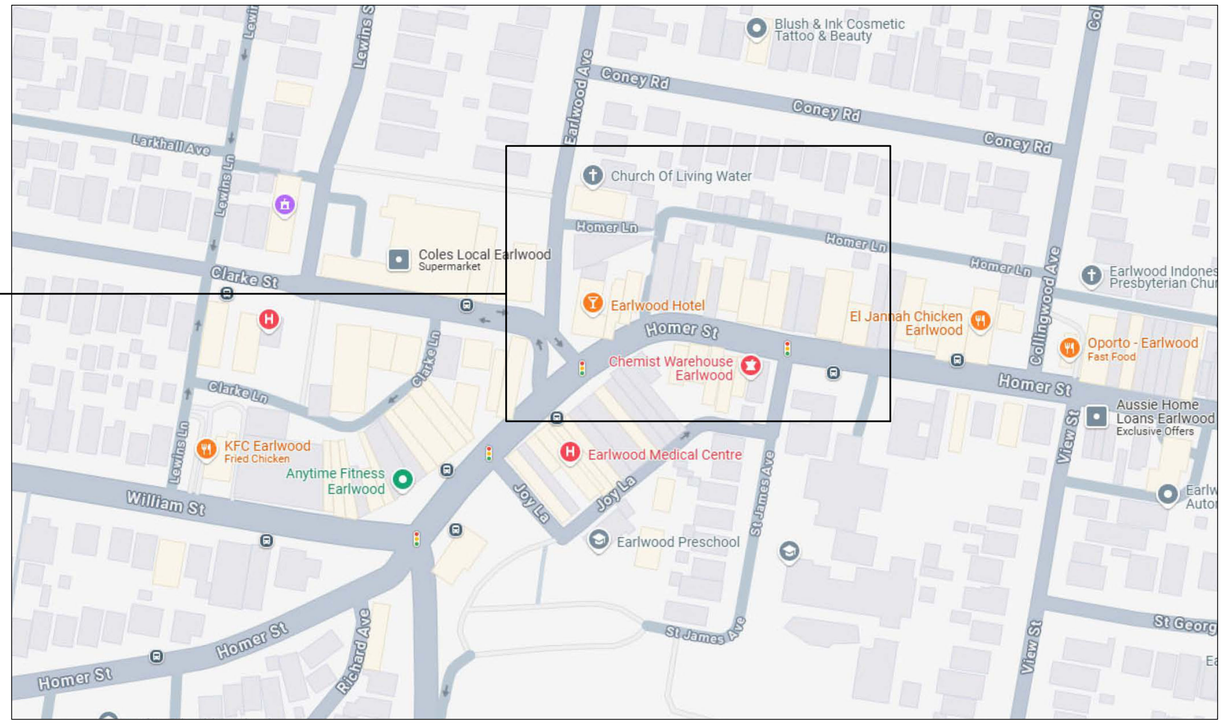

©2025 – THESE DESIGNS, DRAWINGS & SPECIFICATIONS ARE COPYRIGHT & CONFIDENTIAL AND THE PROPERTY OF VECA Group AND MUST NOT BE USED, REPRODUCED OR COPIED WHOLLY OR IN PART WITHOUT THE PERMISSION OF VECA Group. THESE DRAWINGS ARE DESIGN ONLY. SELECTED CONTRACTOR TO PRODUCE ITS OWN SHOP DRAWINGS FOR CONSTRUCTION.
ALL DIMENSIONS MUST BE CHECKED ON SITE BEFORE COMMENCEMENT OF CONSTRUCTION OR MANUFACTURING OF ANY ITEM. USE FIGURED DIMENSIONS IN PREFERENCE TO SCALED DIMENSIONS. ALL WORKS SHALL COMPLY WITH RELEVANT LOCAL HEALTH & COUNCIL REQUIREMENTS, LOCAL BUILDING REGULATIONS AND RELEVANT AUSTRALIAN CODES AND STANDARDS.
ANY DISCREPANCIES TO BE REPORTED TO VECA Group FOR CORRECTION PRIOR TO ANY WORK ON SITE.

ISSUE	AMENDMENTS	DATE
A	LANDLORD/CLIENT APPROVAL	16.04.2025

CLIENT:
FITSTOP.
FITSTOP Australia
51 Manilla Street
EAST BRISBANE QLD 4169
AUSTRALIA
Mobile: 0409 907 269 (Nicole Donohue)
EMAIL: nicole.donohue@fitstop.com

DESIGNER:
VECA Group
ABN 92 473 736 223
MOBILE: 0401 657 190 (Eric Lacour)
Registered Building Practitioner (VIC) - # CDP-ID 54332
Building Services Provider/Building Designer Ltd. (TAS)
License #484351416
EMAIL: veca@vecagroup.com
WEB: https://www.vecagroup.com

PROJECT	FITSTOP EARLWOOD 335 Homer Street Earlwood NSW 2206 (Approx. 218sqm)
DRAWING	LOCATION PLAN
DATE	16th April 2025
DESIGNED	EL
DRAWN	EB
SCALE	N/A (A2 SHEET SIZE)
PROJECT No.	FI.EA.3790
DRAWING No.	VECA_FIEA3790_ 102A

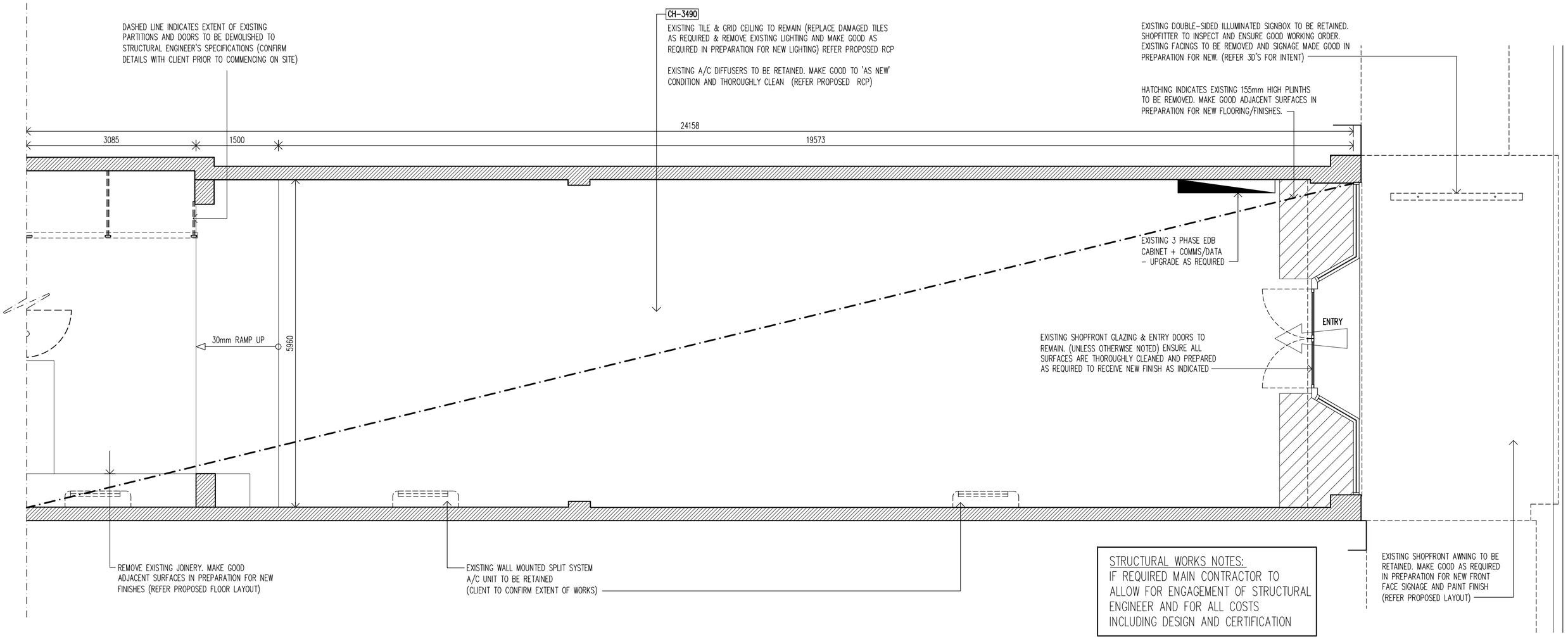

STRUCTURAL WORKS NOTES:
IF REQUIRED MAIN CONTRACTOR TO ALLOW FOR ENGAGEMENT OF STRUCTURAL ENGINEER AND FOR ALL COSTS INCLUDING DESIGN AND CERTIFICATION

1 EXISTING/DEMOLITION PLAN (PART A)
1/50 @ A2

©2025 – THESE DESIGNS, DRAWINGS & SPECIFICATIONS ARE COPYRIGHT & CONFIDENTIAL AND THE PROPERTY OF VECA Group AND MUST NOT BE USED, REPRODUCED OR COPIED WHOLLY OR IN PART WITHOUT THE PERMISSION OF VECA Group. THESE DRAWINGS ARE DESIGN ONLY. SELECTED CONTRACTOR TO PRODUCE ITS OWN SHOP DRAWINGS FOR CONSTRUCTION.
ALL DIMENSIONS MUST BE CHECKED ON SITE BEFORE COMMENCEMENT OF CONSTRUCTION OR MANUFACTURING OF ANY ITEM. USE FIGURED DIMENSIONS IN PREFERENCE TO SCALED DIMENSIONS. ALL WORKS SHALL COMPLY WITH RELEVANT LOCAL HEALTH & COUNCIL REQUIREMENTS, LOCAL BUILDING REGULATIONS AND RELEVANT AUSTRALIAN CODES AND STANDARDS.
ANY DISCREPANCIES TO BE REPORTED TO VECA Group FOR CORRECTION PRIOR TO ANY WORK ON SITE.

ISSUE	AMENDMENTS	DATE
A	LANDLORD/CLIENT APPROVAL	16.04.2025

CLIENT:
FITSTOP.
FITSTOP Australia
51 Manilla Street
EAST BRISBANE QLD 4169
AUSTRALIA
Mobile: 0409 907 269 (Nicole Donohue)
EMAIL: nicole.donohue@fitstop.com

DESIGNER:
VECA Group
ABN 92 473 736 223
MOBILE: 0401 657 190 (Eric Lacour)
Registered Building Practitioner (VIC) - # CDP-ID 54352
Building Services Provider/Building Designer Ltd. (TAS)
License #484351416
EMAIL: veca@vecagroup.com
WEB: https://www.vecagroup.com

PROJECT	FITSTOP EARLWOOD 335 Homer Street Earlwood NSW 2206 (Approx. 218sqm)
DRAWING	EXISTING/DEMOLITION PLAN (PART A)
DATE	16th April 2025
DESIGNED	EL
DRAWN	EB
SCALE	1/50 @ A2
PROJECT No.	FLEA_3790
DRAWING No.	VECA_FIEA3790_ 103A

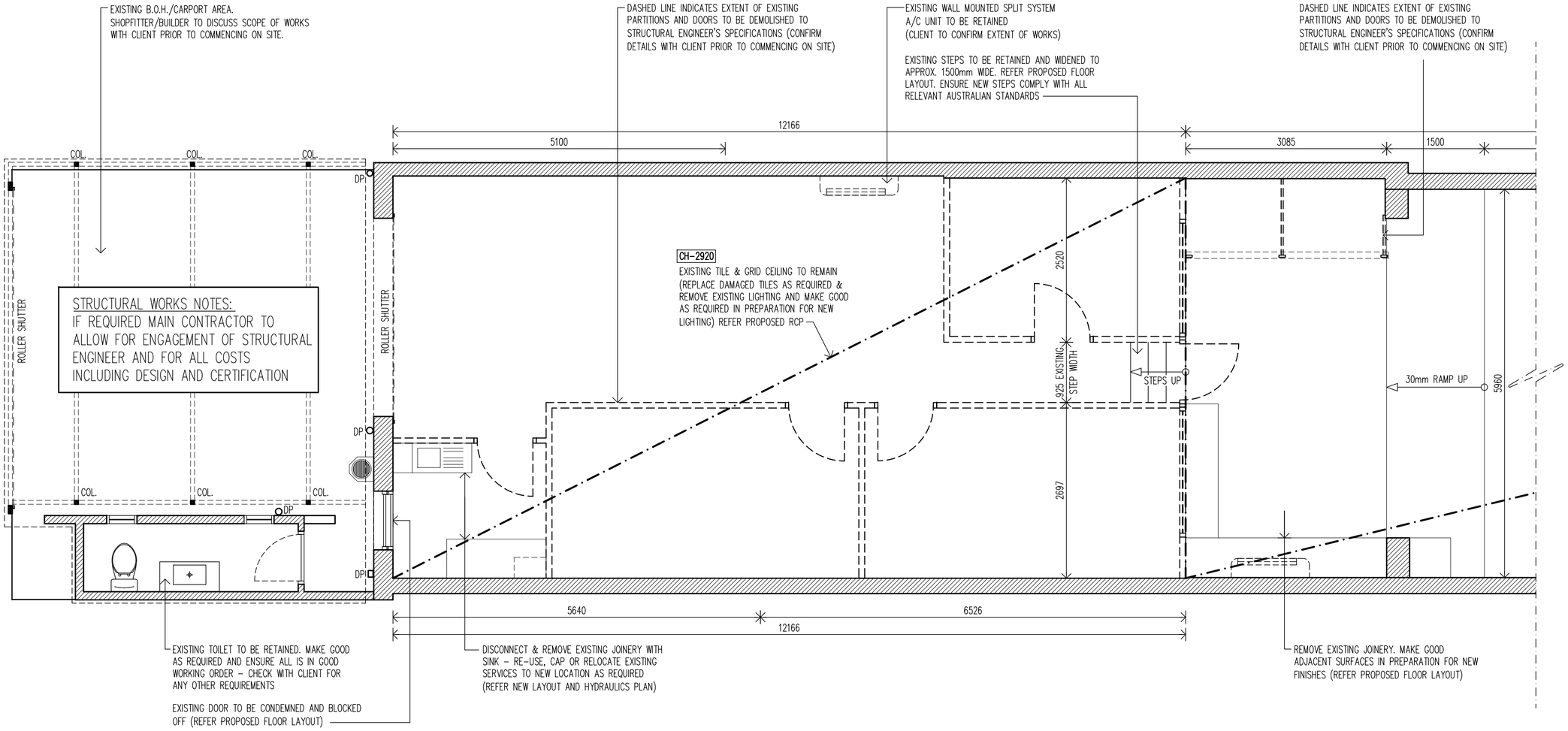

1 EXISTING/DEMOLITION PLAN (PART B)

1/50 @ A2

©2025 – THESE DESIGNS, DRAWINGS & SPECIFICATIONS ARE COPYRIGHT & CONFIDENTIAL AND THE PROPERTY OF VECA Group AND MUST NOT BE USED, REPRODUCED OR COPIED WHOLLY OR IN PART WITHOUT THE PERMISSION OF VECA Group. THESE DRAWINGS ARE DESIGN ONLY. SELECTED CONTRACTOR TO PRODUCE ITS OWN SHOP DRAWINGS FOR CONSTRUCTION.
ALL DIMENSIONS MUST BE CHECKED ON SITE BEFORE COMMENCEMENT OF CONSTRUCTION OR MANUFACTURING OF ANY ITEM. USE FIGURED DIMENSIONS IN PREFERENCE TO SCALED DIMENSIONS. ALL WORKS SHALL COMPLY WITH RELEVANT LOCAL HEALTH & COUNCIL REQUIREMENTS, LOCAL BUILDING REGULATIONS AND RELEVANT AUSTRALIAN CODES AND STANDARDS.
ANY DISCREPANCIES TO BE REPORTED TO VECA Group FOR CORRECTION PRIOR TO ANY WORK ON SITE.

ISSUE	AMENDMENTS	DATE
A	LANDLORD/CLIENT APPROVAL	16.04.2025

CLIENT:
FITSTOP.
FITSTOP Australia
51 Manilla Street
EAST BRISBANE QLD 4169
AUSTRALIA
Mobile: 0409 907 269 (Nicole Donohue)
EMAIL: nicole.donohue@fitstop.com

DESIGNER:
VECA Group
ABN 92 473 736 223
MOBILE: 0401 657 190 (Eric Lacour)
Registered Building Practitioner (VIC) - # CDP-ID 54352
Building Services Provider/Building Designer Ltd. (TAS)
License #484351416
EMAIL: veca@vecagroup.com
WEB: https://www.vecagroup.com

PROJECT	FITSTOP EARLWOOD 335 Homer Street Earlwood NSW 2206 (Approx. 218sqm)
DRAWING	EXISTING/DEMOLITION PLAN (PART B)
DATE	16th April 2025
DESIGNED	EL
DRAWN	EB
SCALE	1/50 @ A2
PROJECT No.	FI.EA.3790
DRAWING No.	VECA_FIEA3790_ 104A

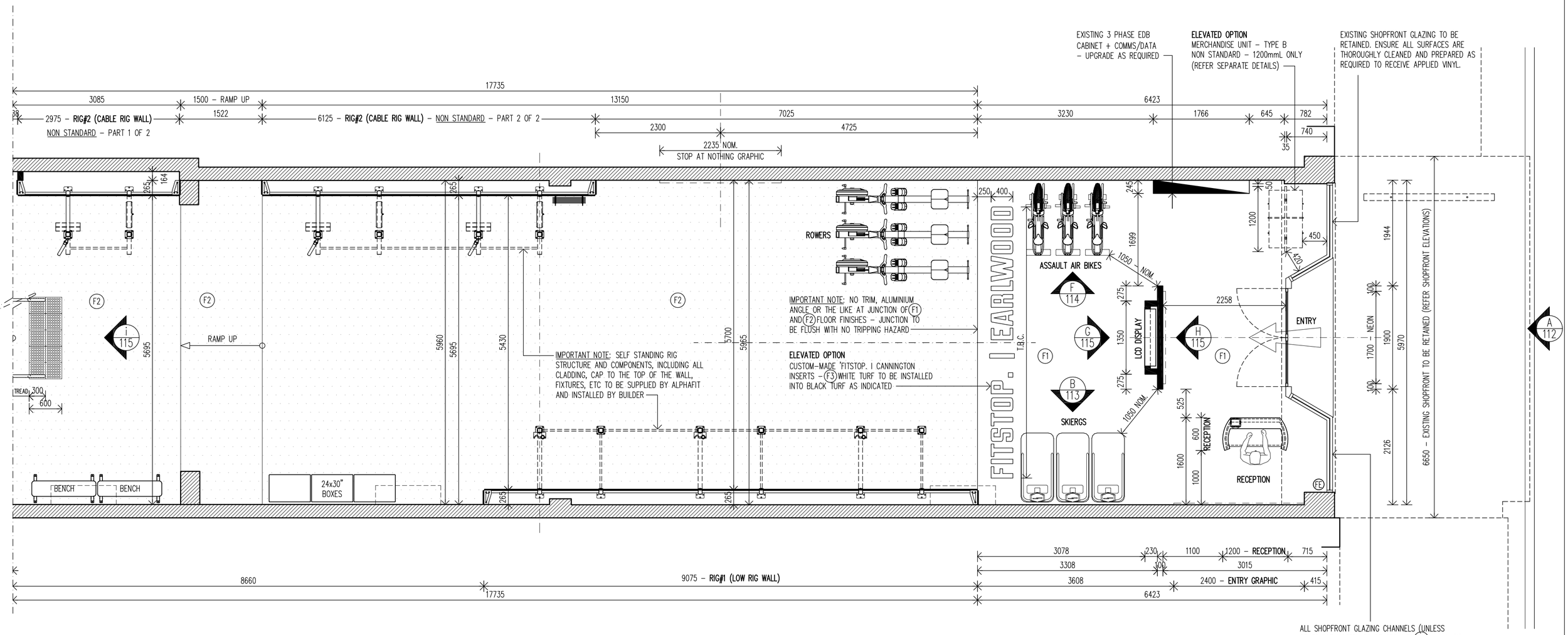

1 PROPOSED FLOOR LAYOUT (PART A)

1/50 @ A2

POWER/DATA/SWITCHES NOTES:

PROVIDE POWER POINTS, DATA POINTS AND SWITCHES AS REQUIRED TO FITSTOP STANDARDS – DISCUSS ALL ON SITE WITH CLIENT – WHITE COVERS ON WHITE BACKGROUND, BLACK COVERS ON BLACK BACKGROUND

LEGENDS:

- NEW WALLS/PARTITIONS
- EXISTING WALLS/PARTITIONS
- FE PORTABLE 4.5KG A:B(E) DRY CHEMICAL FIRE EXTINGUISHER(WITH SIGNAGE) AND BLANKET TO AS/NZS 1850–2009, AS/NZS 1841.1–2007 AND AS2444–2001

GENERAL FLOORCOVERING NOTES:

– CUTTING OR CHASING OF FLOOR SLAB NOT PERMITTED UNLESS APPROVED BY LESSOR

– ALL FLOOR FINISHES MUST BE FINISHED FLUSH WITH ADJACENT FINISH – USE 3mm CLEAR ANODISED FINISH ALUMINIUM ANGLE TO ALL JOINTS TO PROVIDE A LEVEL JUNCTION

– ANY TRIPPING HAZARD IS TO BE AVOIDED

– THE LESSEE IS TO MAKE ADEQUATE PROVISIONS IN THE FITOUT FOR ALL CONTROL & EXPANSION JOINTS WITHIN THE TENANCY – CO–ORDINATE WITH LESSOR & DESIGNER FOR TREATMENT

©2025 – THESE DESIGNS, DRAWINGS & SPECIFICATIONS ARE COPYRIGHT & CONFIDENTIAL AND THE PROPERTY OF VECA Group AND MUST NOT BE USED, REPRODUCED OR COPIED WHOLLY OR IN PART WITHOUT THE PERMISSION OF VECA Group. THESE DRAWINGS ARE DESIGN ONLY. SELECTED CONTRACTOR TO PRODUCE ITS OWN SHOP DRAWINGS FOR CONSTRUCTION.
ALL DIMENSIONS MUST BE CHECKED ON SITE BEFORE COMMENCEMENT OF CONSTRUCTION OR MANUFACTURING OF ANY ITEM. USE FIGURED DIMENSIONS IN PREFERENCE TO SCALED DIMENSIONS. ALL WORKS SHALL COMPLY WITH RELEVANT LOCAL HEALTH & COUNCIL REQUIREMENTS, LOCAL BUILDING REGULATIONS AND RELEVANT AUSTRALIAN CODES AND STANDARDS.
ANY DISCREPANCIES TO BE REPORTED TO VECA Group FOR CORRECTION PRIOR TO ANY WORK ON SITE.

ISSUE	AMENDMENTS	DATE
A	LANDLORD/CLIENT APPROVAL	16.04.2025

CLIENT:
FITSTOP.
FITSTOP Australia
51 Manilla Street
EAST BRISBANE QLD 4169
AUSTRALIA
Mobile: 0409 907 269 (Nicole Donohue)
EMAIL: nicole.donohue@fitstop.com

DESIGNER:
VECA Group
ABN 92 473 736 223
MOBILE: 0401 657 190 (Eric Lacour)
Registered Building Practitioner (VIC) - # CDP-ID 54352
Building Services Provider/Building Designer Ltd. (TAS)
License #484351416
EMAIL: veca@vecagroup.com
WEB: https://www.vecagroup.com

PROJECT	FITSTOP EARLWOOD 335 Homer Street Earlwood NSW 2206 (Approx. 218sqm)
DRAWING	PROPOSED FLOOR LAYOUT (PART A)
DATE	16th April 2025
DESIGNED	EL
DRAWN	EB
SCALE	1/50 @ A2
PROJECT No.	FLEA_3790
DRAWING No.	VECA_FIEA3790_ **105A**

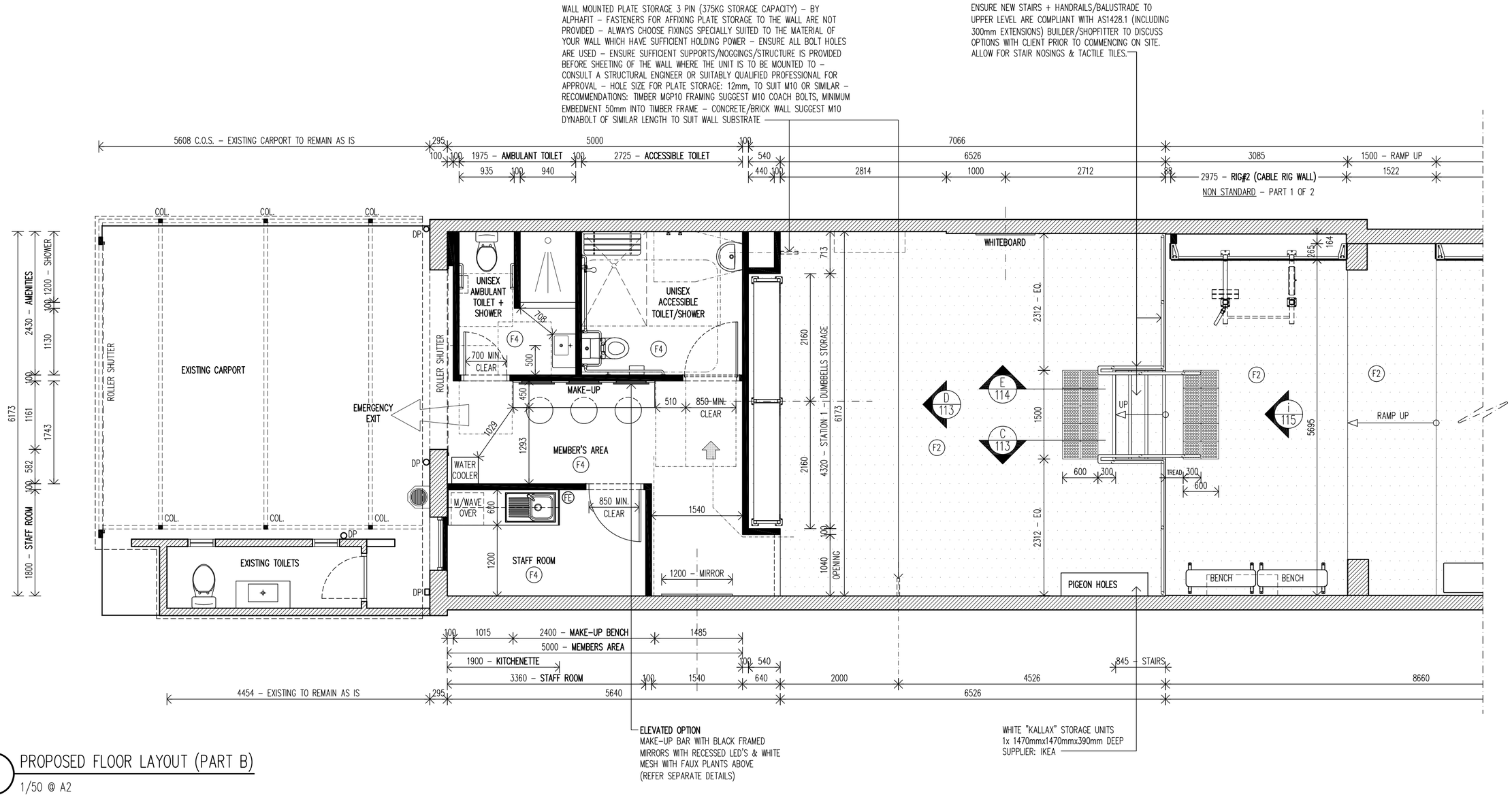

1 PROPOSED FLOOR LAYOUT (PART B)

1/50 @ A2

POWER/DATA/SWITCHES NOTES:

PROVIDE POWER POINTS, DATA POINTS AND SWITCHES AS REQUIRED TO FITSTOP STANDARDS – DISCUSS ALL ON SITE WITH CLIENT – WHITE COVERS ON WHITE BACKGROUND, BLACK COVERS ON BLACK BACKGROUND

LEGENDS:

- NEW WALLS/PARTITIONS
- EXISTING WALLS/PARTITIONS
- (FE) PORTABLE 4.5KG A:B(E) DRY CHEMICAL FIRE EXTINGUISHER(WITH SIGNAGE) AND BLANKET TO AS/NZS 1850–2009, AS/NZS 1841.1–2007 AND AS2444–2001

GENERAL FLOORCOVERING NOTES:

– CUTTING OR CHASING OF FLOOR SLAB NOT PERMITTED UNLESS APPROVED BY LESSOR

– ALL FLOOR FINISHES MUST BE FINISHED FLUSH WITH ADJACENT FINISH – USE 3mm CLEAR ANODISED FINISH ALUMINIUM ANGLE TO ALL JOINTS TO PROVIDE A LEVEL JUNCTION

– ANY TRIPPING HAZARD IS TO BE AVOIDED

– THE LESSEE IS TO MAKE ADEQUATE PROVISIONS IN THE FITOUT FOR ALL CONTROL & EXPANSION JOINTS WITHIN THE TENANCY – CO–ORDINATE WITH LESSOR & DESIGNER FOR TREATMENT

©2025 – THESE DESIGNS, DRAWINGS & SPECIFICATIONS ARE COPYRIGHT & CONFIDENTIAL AND THE PROPERTY OF VECA Group AND MUST NOT BE USED, REPRODUCED OR COPIED WHOLLY OR IN PART WITHOUT THE PERMISSION OF VECA Group. THESE DRAWINGS ARE DESIGN ONLY. SELECTED CONTRACTOR TO PRODUCE ITS OWN SHOP DRAWINGS FOR CONSTRUCTION.
ALL DIMENSIONS MUST BE CHECKED ON SITE BEFORE COMMENCEMENT OF CONSTRUCTION OR MANUFACTURING OF ANY ITEM. USE FIGURED DIMENSIONS IN PREFERENCE TO SCALED DIMENSIONS. ALL WORKS SHALL COMPLY WITH RELEVANT LOCAL HEALTH & COUNCIL REQUIREMENTS, LOCAL BUILDING REGULATIONS AND RELEVANT AUSTRALIAN CODES AND STANDARDS.
ANY DISCREPANCIES TO BE REPORTED TO VECA Group FOR CORRECTION PRIOR TO ANY WORK ON SITE.

ISSUE	AMENDMENTS	DATE
A	LANDLORD/CLIENT APPROVAL	16.04.2025

CLIENT:
FITSTOP.
FITSTOP Australia
51 Manilla Street
EAST BRISBANE QLD 4169
AUSTRALIA
Mobile: 0409 907 269 (Nicole Donohue)
EMAIL: nicole.donohue@fitstop.com

DESIGNER:
VECA Group
ABN 92 473 736 223
MOBILE: 0401 657 190 (Eric Lacour)
Registered Building Practitioner (VIC) - # CDP-ID 54352
Building Services Provider/Building Designer Ltd. (TAS)
License #484351416
EMAIL: veca@vecagroup.com
WEB: https://www.vecagroup.com

PROJECT	FITSTOP EARLWOOD 335 Homer Street Earlwood NSW 2206 (Approx. 218sqm)
DRAWING	PROPOSED FLOOR LAYOUT (PART B)
DATE	16th April 2025
DESIGNED	EL
DRAWN	EB
SCALE	1/50 @ A2
PROJECT No.	FI.EA.3790
DRAWING No.	VECA_FIEA3790_ **106A**

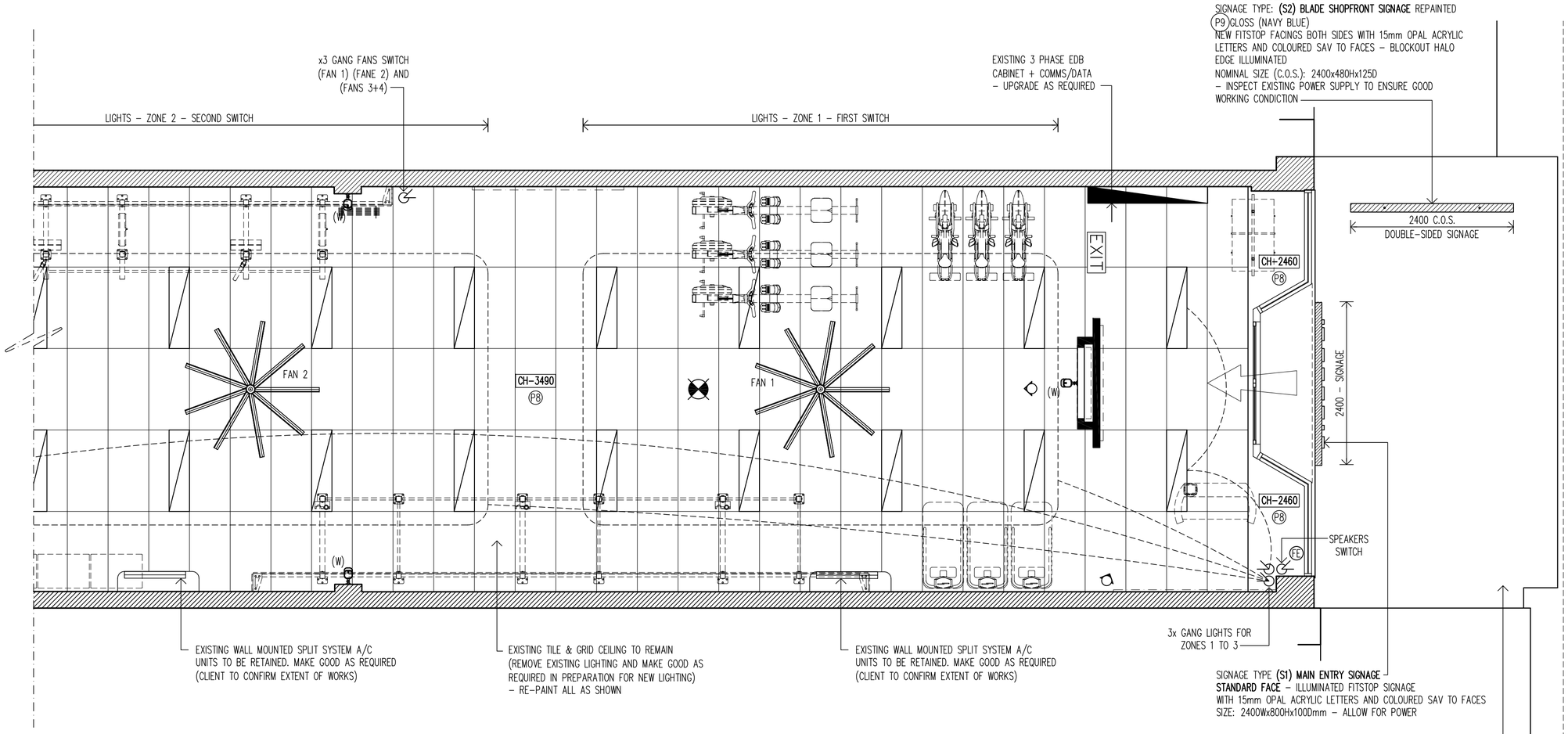

1 REFLECTED CEILING PLAN (PART A)

1/50 @ A2

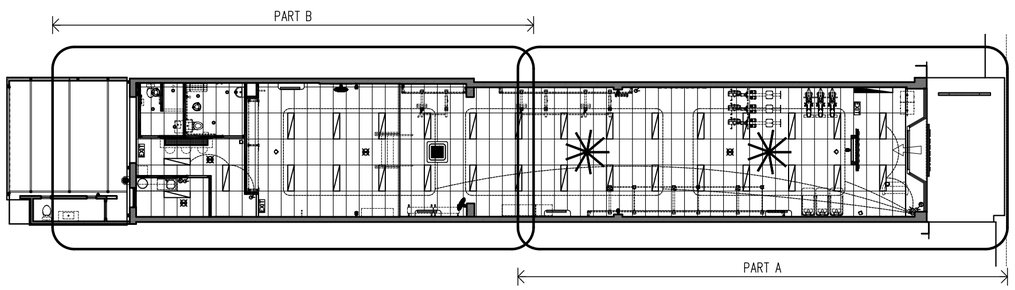

OVERAL PLAN

1/200 @ A2

ELECTRICAL/MECHANICAL LEGENDS

IMPORTANT NOTES:

– IF REQUIRED, ALL EXISTING LIGHT FITTINGS AND REDUNDANT ELEMENTS TO BE REMOVED, CEILING TO BE MADE GOOD IN PREPARATION FOR NEW PAINT FINISHES AS NOTED
– AS 2560.2:2021 STIPULATES A "MINIMUM SERVICE ILLUMINANCE" OF 300LUX – THIS IS FOR A "LEVEL OF PLAY" CLASSIFIED AS "RECREATION AND TRAINING" – FOR THE "COMPETITION" LEVEL, THE RECOMMENDATION IS 500LUX – FOR A FITSTOP GYM A GOOD COMPROMISE IS 400LUX
– A LIGHTING DESIGN MUST BE PROVIDED TO CONFIRM LIGHTING LEVELS (400LUX MINIMAL AS PER ABOVE) ARE SATISFACTORY
– IF EXISTING, SPRINKLER & AIR CONDITIONING TO BE INSPECTED BY LESSOR'S NOMINATED CONTRACTORS TO ENSURE GOOD WORKING ORDER (EXISTING SUPPLY & RETURN AIR GRILLES TO BE INSPECTED AND MADE GOOD AS REQUIRED)

GENERAL LED PANELS
RANGE: OSRAM LEDVANCE TRI COLOUR LED PANEL 36W 6500K
SIZE: 1200X300MM
MOUNTING OPTIONS:
1. RECESSED
2. SURFACE MOUNTED
   –ALLOW FOR "SURFACE MOUNTED KIT"
3. SUSPENDED
   –ALLOW FOR "PANEL WIRE SUSPENSION KIT"

(MOUNTING OPTIONS TO BE DISCUSSED WITH CLIENT PRIOR TO INSTALLATION)

12W
FEATURE RECESSED LED DOWNLIGHT
NAME: AURORA TRITONE – Ø110mm – IP44
OUTPUT: 12W – 1170 lm
COLOUR TEMPERATURE: 4200K
CRI: 80+
OPTICS: 100° BEAM / FINISH: WHITE – DIMMABLE
CODE: AURORA12W110-W-TRI
SUPPLIER: WWW.HANECO.COM.AU – 1300 001 LED

9W
FEATURE RECESSED LED DOWNLIGHT @ MIRRORS
NAME: AURORA TRITONE – Ø110mm – IP44
OUTPUT: 9W – 860 lm
COLOUR TEMPERATURE: 4200K
CRI: 80+
OPTICS: 100° BEAM / FINISH: WHITE
CODE: AURORA9W110-W-TRI
SUPPLIER: WWW.HANECO.COM.AU – 1300 001 LED

IP65
SHOWER RECESSED LED DOWNLIGHT
NAME: DETAIL – Ø109mm – IP65
OUTPUT: 9W – 1120 Lm
COLOUR TEMPERATURE: 4000K
CRI: 80+
OPTICS: 60° BEAM / FINISH: WHITE
CODE: D9W110R4KWIP65
SUPPLIER: WWW.HANECO.COM.AU – 1300 001 LED

EXISTING AND/OR NEW EMERGENCY LIGHTING (C.O.S.)
NEW TO BCA REQUIREMENTS AND/OR TO BE INSPECTED TO ENSURE GOOD WORKING ORDER & MAKE GOOD AS REQUIRED

SWITCH WITH DIMMER IF NOTED
(FIT FOR PURPOSE AS NOTED)

SECURITY DOME CAMERA
SECURITY SYSTEM DETAILS T.B.C. WITH CLIENT'S BASED ON BUDGET AND LEVEL OF PERFORMANCE REQUIRED

FANS (WALL MOUNTED)
RENEGADE INDUSTRIAL FAN – RI280WFAN
280WATT, 3x SPEED WALL FAN, Ø750mm BLADE
COLOUR: BLACK
SUPPLIER: WWW.TRADETOOLS.COM

FANS (CEILING MOUNTED)
AIRFUSION RESORT 2030mm DC FAN (MATTE BLACK)
BRAND: LUCCI AIR
CODE: SKU 212882
SIZE: Ø2030X330mmH
SUPPLIER: WWW.BEACONLIGHTINGCOMMERCIAL.COM.AU

(B)/(W)
SPEAKERS (WITH SWIVEL+TILT WALL MOUNT BRACKET)
SPEAKER: SONOS PLAY:1 BY WWW.SONOS.COM
BRACKET: MODEL WSWM21 BY SANUS
MOUNTING HEIGHT IS CH–3200 TO UNDERSIDE IF POSSIBLE
ALLOW FOR 1x POWER PER SPEAKER, WIRED BACK TO UNDER RECEPTION DESK (REFER SEPARATE TYPICAL DETAILS) – (B) BLACK FINISH or (W) WHITE FINISH – QTY: 4x (6x IF GYM OVER 200m²)

EXIT
EXISTING AND/OR NEW AIR CONDITIONING RETURN AIR GRILLE
TO MECHANICAL ENGINEER'S SPECIFICATIONS
COLOUR: WHITE

MECHANICAL EXHAUST VENTILATION REGISTERS
FIT FOR PURPOSE – TO COMPLY WITH AS 1668

MECHANICAL REQUIREMENTS (A/C + EXHAUST)

- ALL A/C IS EXISTING – SOME DIFFUSERS AND RETURN AIR GRILLE TO BE RELOCATED AS NOTED
- ALL TO COMPLY WITH AS 1668.2–2012 AND AS 1668.2–2012/AMDT 1–2013

GENERAL NOTES:

– PROVIDE ONE CEILING SENSOR TO ACTIVATE LIGHTS (& EXHAUST), FIT FOR PURPOSE, IN EACH AMENITIES COMPARTMENT (REFER DRAWINGS)
– PROVIDE ALL SWITCHES, POWER/DATA POINTS, AS REQUIRED TO FITSTOP STANDARDS AND AS SHOWN
– ALL SWITCHES, POWER/DATA POINTS, ETC TO BE CLIPSAL C2000 CLASSIC SERIES (COVER PLATES COLOUR TO MATCH BACKGROUND FINISH COLOUR)
– ALLOW FOR SEPARATE CIRCUITS AS REQUIRED, FIT FOR PURPOSE, FOR ALL POWER AND LIGHTING

©2025 – THESE DESIGNS, DRAWINGS & SPECIFICATIONS ARE COPYRIGHT & CONFIDENTIAL AND THE PROPERTY OF VECA Group AND MUST NOT BE USED, REPRODUCED OR COPIED WHOLLY OR IN PART WITHOUT THE PERMISSION OF VECA Group. THESE DRAWINGS ARE DESIGN ONLY. SELECTED CONTRACTOR TO PRODUCE ITS OWN SHOP DRAWINGS FOR CONSTRUCTION.
ALL DIMENSIONS MUST BE CHECKED ON SITE BEFORE COMMENCEMENT OF CONSTRUCTION OR MANUFACTURING OF ANY ITEM. USE FIGURED DIMENSIONS IN PREFERENCE TO SCALED DIMENSIONS. ALL WORKS SHALL COMPLY WITH RELEVANT LOCAL HEALTH & COUNCIL REQUIREMENTS, LOCAL BUILDING REGULATIONS AND RELEVANT AUSTRALIAN CODES AND STANDARDS.
ANY DISCREPANCIES TO BE REPORTED TO VECA Group FOR CORRECTION PRIOR TO ANY WORK ON SITE.

ISSUE	AMENDMENTS	DATE
A	LANDLORD/CLIENT APPROVAL	16.04.2025

CLIENT:
FITSTOP.
FITSTOP Australia
51 Manilla Street
EAST BRISBANE QLD 4169
AUSTRALIA
Mobile: 0409 907 269 (Nicole Donohue)
EMAIL: nicole.donohue@fitstop.com

DESIGNER:
VECA Group
ABN 92 473 736 223
MOBILE: 0401 657 190 (Eric Lacour)
Registered Building Practitioner (VIC) - # CDP-JD 54352
Building Services Provider/Building Designer Ltd. (TAS)
License #484351416
EMAIL: veca@vecagroup.com
WEB: https://www.vecagroup.com

PROJECT	FITSTOP EARLWOOD 335 Homer Street Earlwood NSW 2206 (Approx. 218sqm)
DRAWING	REFLECTED CEILING PLAN INC. LIGHTING (PART A)
DATE	16th April 2025
DESIGNED	EL
DRAWN	EB
SCALE	AS INDICATED (A2 SHEET SIZE)
PROJECT No.	FI.EA.3790
DRAWING No.	VECA_FIEA3790_ 107A

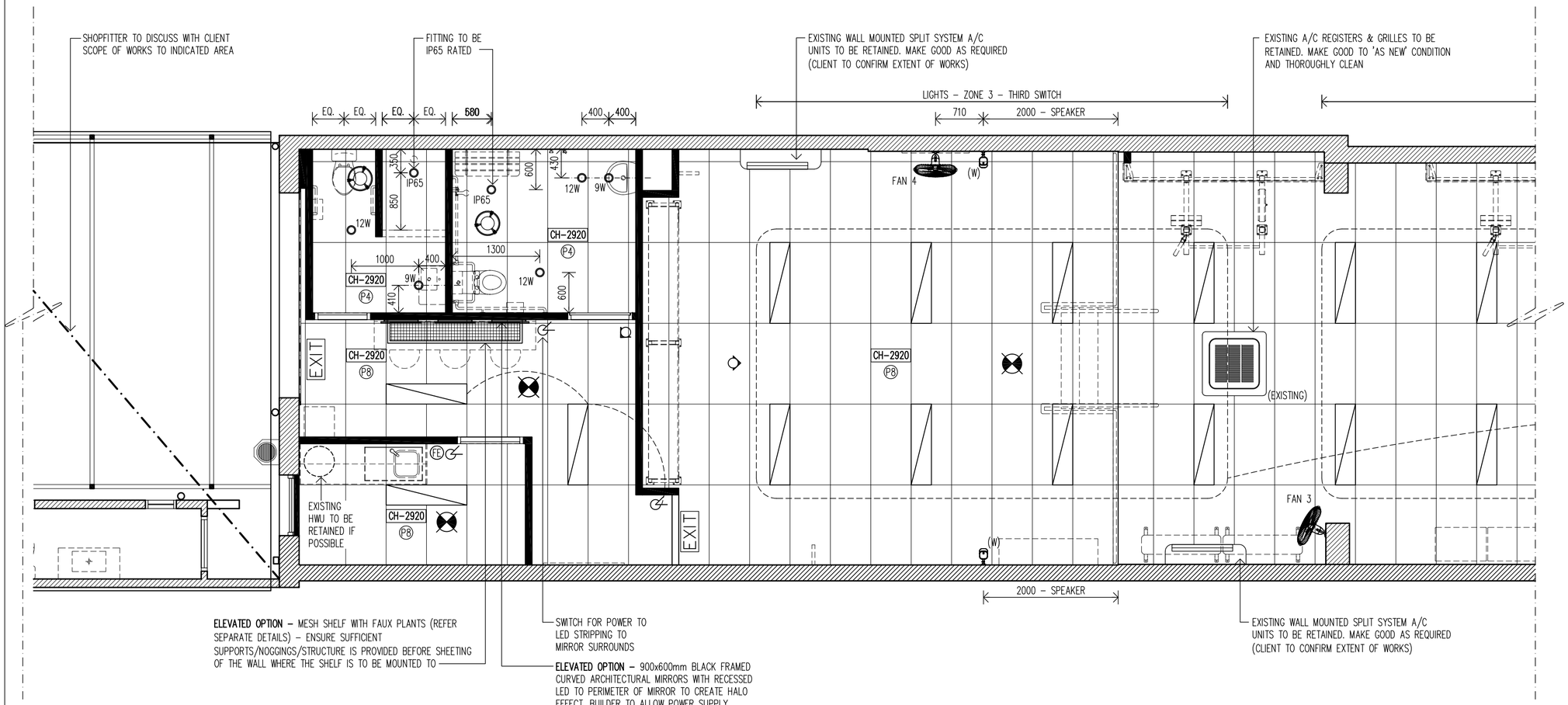

1 REFLECTED CEILING PLAN (PART B)

1/50 @ A2

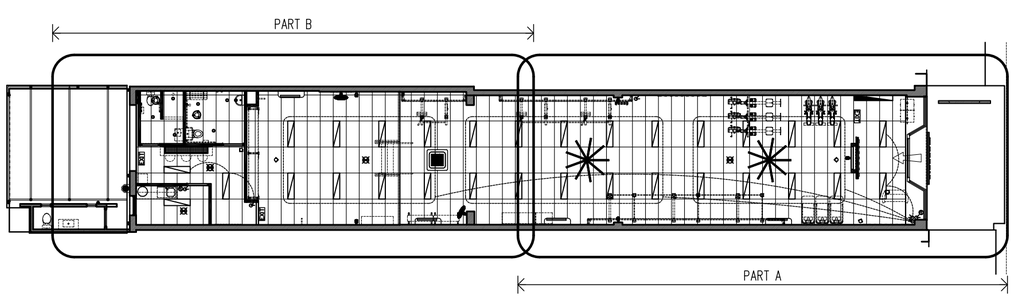

OVERAL PLAN

1/200 @ A2

ELECTRICAL/MECHANICAL LEGENDS

IMPORTANT NOTES:

- IF REQUIRED, ALL EXISTING LIGHT FITTINGS AND REDUNDANT ELEMENTS TO BE REMOVED, CEILING TO BE MADE GOOD IN PREPARATION FOR NEW PAINT FINISHES AS NOTED
- AS 2560.2:2021 STIPULATES A "MINIMUM SERVICE ILLUMINANCE" OF 300LUX – THIS IS FOR A "LEVEL OF PLAY" CLASSIFIED AS "RECREATION AND TRAINING" – FOR THE "COMPETITION" LEVEL, THE RECOMMENDATION IS 500LUX – FOR A FITSTOP GYM A GOOD COMPROMISE IS 400LUX
- A LIGHTING DESIGN MUST BE PROVIDED TO CONFIRM LIGHTING LEVELS (400LUX MINIMAL AS PER ABOVE) ARE SATISFACTORY
- IF EXISTING, SPRINKLER & AIR CONDITIONING TO BE INSPECTED BY LESSOR'S NOMINATED CONTRACTORS TO ENSURE GOOD WORKING ORDER (EXISTING SUPPLY & RETURN AIR GRILLES TO BE INSPECTED AND MADE GOOD AS REQUIRED)

GENERAL LED PANELS
RANGE: OSRAM LEDVANCE TRI COLOUR LED PANEL 36W 6500K
SIZE: 1200X300MM
MOUNTING OPTIONS:
1. RECESSED
2. SURFACE MOUNTED
   –ALLOW FOR "SURFACE MOUNTED KIT"
3. SUSPENDED
   –ALLOW FOR "PANEL WIRE SUSPENSION KIT"

(MOUNTING OPTIONS TO BE DISCUSSED WITH CLIENT PRIOR TO INSTALLATION)

12W — **FEATURE RECESSED LED DOWNLIGHT**
NAME: AURORA TRITONE – ø110mm – IP44
OUTPUT: 12W – 1170 lm
COLOUR TEMPERATURE: 4200K
CRI: 80+
OPTICS: 100° BEAM / FINISH: WHITE – DIMMABLE
CODE: AURORA12W110-W-TRI
SUPPLIER: WWW.HANECO.COM.AU – 1300 001 LED

9W — **FEATURE RECESSED LED DOWNLIGHT @ MIRRORS**
NAME: AURORA TRITONE – ø110mm – IP44
OUTPUT: 9W – 860 lm
COLOUR TEMPERATURE: 4200K
CRI: 80+
OPTICS: 100° BEAM / FINISH: WHITE
CODE: AURORA9W110-W-TRI
SUPPLIER: WWW.HANECO.COM.AU – 1300 001 LED

IP65 — **SHOWER RECESSED LED DOWNLIGHT**
NAME: DETAIL – ø109mm – IP65
OUTPUT: 9W – 1120 Lm
COLOUR TEMPERATURE: 4000K
CRI: 80+
OPTICS: 60° BEAM / FINISH: WHITE
CODE: D9W110R4KWIP65
SUPPLIER: WWW.HANECO.COM.AU – 1300 001 LED

EXISTING AND/OR NEW EMERGENCY LIGHTING (C.O.S.)
NEW TO BCA REQUIREMENTS AND/OR TO BE INSPECTED TO ENSURE GOOD WORKING ORDER & MAKE GOOD AS REQUIRED

SWITCH WITH DIMMER IF NOTED
(FIT FOR PURPOSE AS NOTED)

SECURITY DOME CAMERA
SECURITY SYSTEM DETAILS T.B.C. WITH CLIENT'S BASED ON BUDGET AND LEVEL OF PERFORMANCE REQUIRED

FANS (WALL MOUNTED)
RENEGADE INDUSTRIAL FAN – RI280WFAN
280WATT, 3x SPEED WALL FAN, ø750mm BLADE
COLOUR: BLACK
SUPPLIER: WWW.TRADETOOLS.COM

FANS (CEILING MOUNTED)
AIRFUSION RESORT 2030mm DC FAN (MATTE BLACK)
BRAND:LUCCI AIR
CODE: SKU 212882
SIZE: ø2030X330mmH
SUPPLIER: WWW.BEACONLIGHTINGCOMMERCIAL.COM.AU

(B)/(W) — **SPEAKERS** (WITH SWIVEL+TILT WALL MOUNT BRACKET)
SPEAKER: SONOS PLAY:1 BY WWW.SONOS.COM
BRACKET: MODEL WSWM21 BY SANUS
MOUNTING HEIGHT IS CH-3200 TO UNDERSIDE IF POSSIBLE
ALLOW FOR 1x POWER PER SPEAKER, WIRED BACK TO UNDER RECEPTION DESK (REFER SEPARATE TYPICAL DETAILS) – (B) BLACK FINISH or (W) WHITE FINISH – QTY: 4x (6x IF GYM OVER 200m²)

EXIT — **EXISTING AND/OR NEW AIR CONDITIONING RETURN AIR GRILLE**
TO MECHANICAL ENGINEER'S SPECIFICATIONS
COLOUR: WHITE

MECHANICAL EXHAUST VENTILATION REGISTERS
FIT FOR PURPOSE – TO COMPLY WITH AS 1668

MECHANICAL REQUIREMENTS (A/C + EXHAUST)

- ALL A/C IS EXISTING – SOME DIFFUSERS AND RETURN AIR GRILLE TO BE RELOCATED AS NOTED
- ALL TO COMPLY WITH AS 1668.2-2012 AND AS 1668.2-2012/AMDT 1-2013

GENERAL NOTES:

- PROVIDE ONE CEILING SENSOR TO ACTIVATE LIGHTS (& EXHAUST), FIT FOR PURPOSE, IN EACH AMENITIES COMPARTMENT (REFER DRAWINGS)
- PROVIDE ALL SWITCHES, POWER/DATA POINTS, AS REQUIRED TO FITSTOP STANDARDS AND AS SHOWN
- ALL SWITCHES, POWER/DATA POINTS, ETC TO BE CLIPSAL C2000 CLASSIC SERIES (COVER PLATES COLOUR TO MATCH BACKGROUND FINISH COLOUR)
- ALLOW FOR SEPARATE CIRCUITS AS REQUIRED, FIT FOR PURPOSE, FOR ALL POWER AND LIGHTING

©2025 – THESE DESIGNS, DRAWINGS & SPECIFICATIONS ARE COPYRIGHT & CONFIDENTIAL AND THE PROPERTY OF VECA Group AND MUST NOT BE USED, REPRODUCED OR COPIED WHOLLY OR IN PART WITHOUT THE PERMISSION OF VECA Group. THESE DRAWINGS ARE DESIGN ONLY. SELECTED CONTRACTOR TO PRODUCE ITS OWN SHOP DRAWINGS FOR CONSTRUCTION.
ALL DIMENSIONS MUST BE CHECKED ON SITE BEFORE COMMENCEMENT OF CONSTRUCTION OR MANUFACTURING OF ANY ITEM. USE FIGURED DIMENSIONS IN PREFERENCE TO SCALED DIMENSIONS. ALL WORKS SHALL COMPLY WITH RELEVANT LOCAL HEALTH & COUNCIL REQUIREMENTS, LOCAL BUILDING REGULATIONS AND RELEVANT AUSTRALIAN CODES AND STANDARDS.
ANY DISCREPANCIES TO BE REPORTED TO VECA Group FOR CORRECTION PRIOR TO ANY WORK ON SITE.

ISSUE	AMENDMENTS	DATE
A	LANDLORD/CLIENT APPROVAL	16.04.2025

CLIENT:
FITSTOP.
FITSTOP Australia
51 Manilla Street
EAST BRISBANE QLD 4169
AUSTRALIA
Mobile: 0409 907 269 (Nicole Donohue)
EMAIL: nicole.donohue@fitstop.com

DESIGNER:
VECA Group
ABN 92 473 736 223
MOBILE: 0401 657 190 (Eric Lacour)
Registered Building Practitioner (VIC) - # CDP-ID 54332
Building Services Provider/Building Designer Ltd. (TAS)
License #484351416
EMAIL: veca@vecagroup.com
WEB: https://www.vecagroup.com

PROJECT	FITSTOP EARLWOOD 335 Homer Street Earlwood NSW 2206 (Approx. 218sqm)
DRAWING	REFLECTED CEILING PLAN INC. LIGHTING (PART B)
DATE	16th April 2025
DESIGNED	EL
DRAWN	EB
SCALE	AS INDICATED (A2 SHHET SIZE)
PROJECT No.	FI.EA.3790
DRAWING No.	VECA_FIEA3790_ 108A

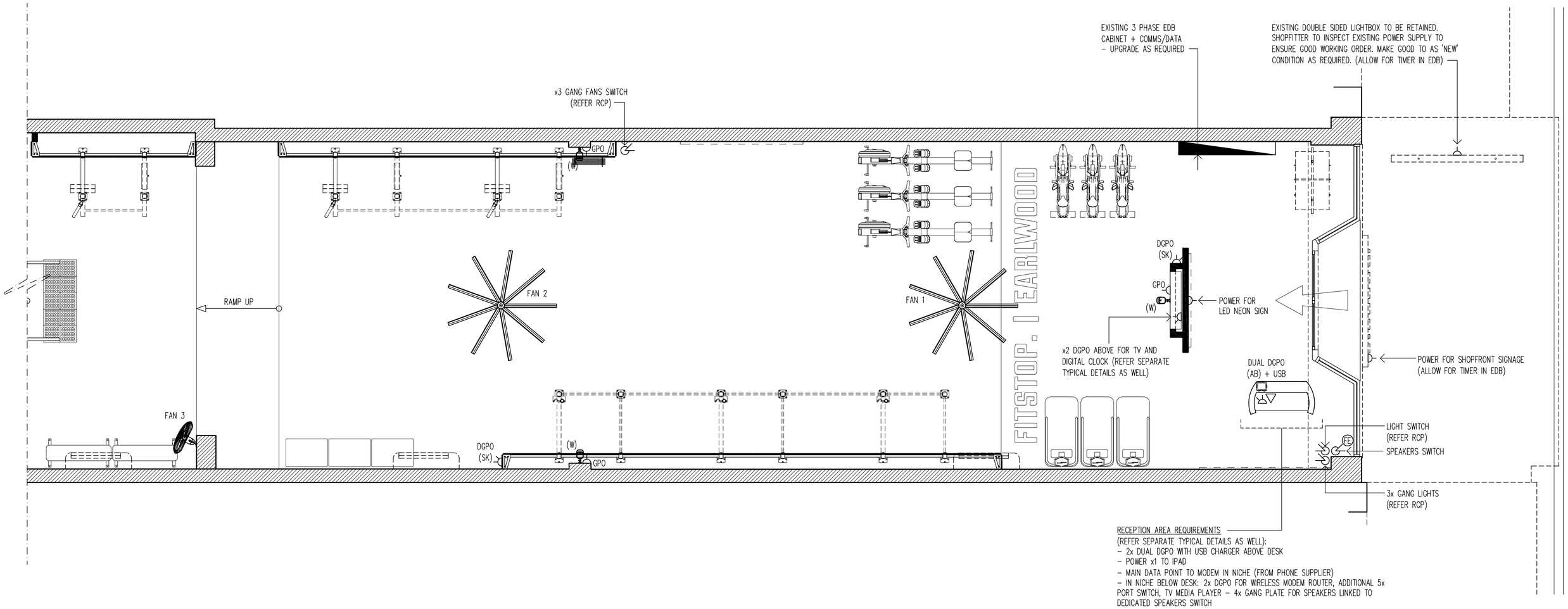

1 ELECTRICAL PLAN – INCLUDING POWER & DATA (PART A)

1/50 @ A2

ELECTRICAL LEGENDS

DGPO	**DGPO** DOUBLE GENERAL PURPOSE OUTLET (FIT FOR PURPOSE AS NOTED) (AB) – ABOVE BENCH (UB) – UNDER BENCH (SK) – SKIRTING
GPO	**GPO** SINGLE GENERAL PURPOSE OUTLET (FIT FOR PURPOSE AS NOTED)
	SWITCH (REFER RCP)
	DATA CAT6 (FIT TO PURPOSE AS NOTED)
(B)/(W)	**SPEAKERS** FITSTOP STANDARD – MOUNTING HEIGHT IS CH–3200 TO UNDERSIDE – ALLOW FOR 1x POWER PER SPEAKER, WIRED BACK TO UNDER RECEPTION DESK (REFER SEPARATE TYPICAL DETAILS) – (B) BLACK FINISH or (W) WHITE FINISH – QTY: 4x

GENERAL NOTES:

– PROVIDE ONE CEILING SENSOR TO ACTIVATE LIGHTS (& EXHAUST), FIT FOR PURPOSE, IN EACH AMENITIES COMPARTMENT (REFER DRAWINGS)
– PROVIDE ALL SWITCHES, POWER/DATA POINTS, AS REQUIRED TO FITSTOP STANDARDS AND AS SHOWN
– ALL SWITCHES, POWER/DATA POINTS, ETC TO BE CLIPSAL C2000 CLASSIC SERIES (COVER PLATES COLOUR TO MATCH BACKGROUND FINISH COLOUR)
– ALLOW FOR SEPARATE CIRCUITS AS REQUIRED, FIT TO PURPOSE, FOR ALL POWER AND LIGHTING

©2025 – THESE DESIGNS, DRAWINGS & SPECIFICATIONS ARE COPYRIGHT & CONFIDENTIAL AND THE PROPERTY OF VECA Group AND MUST NOT BE USED, REPRODUCED OR COPIED WHOLLY OR IN PART WITHOUT THE PERMISSION OF VECA Group. THESE DRAWINGS ARE DESIGN ONLY. SELECTED CONTRACTOR TO PRODUCE ITS OWN SHOP DRAWINGS FOR CONSTRUCTION.
ALL DIMENSIONS MUST BE CHECKED ON SITE BEFORE COMMENCEMENT OF CONSTRUCTION OR MANUFACTURING OF ANY ITEM. USE FIGURED DIMENSIONS IN PREFERENCE TO SCALED DIMENSIONS. ALL WORKS SHALL COMPLY WITH RELEVANT LOCAL HEALTH & COUNCIL REQUIREMENTS, LOCAL BUILDING REGULATIONS AND RELEVANT AUSTRALIAN CODES AND STANDARDS.
ANY DISCREPANCIES TO BE REPORTED TO VECA Group FOR CORRECTION PRIOR TO ANY WORK ON SITE.

ISSUE	AMENDMENTS	DATE
A	LANDLORD/CLIENT APPROVAL	16.04.2025

CLIENT:
FITSTOP.
FITSTOP Australia
51 Manilla Street
EAST BRISBANE QLD 4169
AUSTRALIA
Mobile: 0409 907 269 (Nicole Donohue)
EMAIL: nicole.donohue@fitstop.com

DESIGNER:
VECA Group
ABN 92 473 736 223
MOBILE: 0401 657 190 (Eric Lacour)
Registered Building Practitioner (VIC) - # CDP-ID 54352
Building Services Provider/Building Designer Ltd. (TAS)
License #484351416
EMAIL: veca@vecagroup.com
WEB: https://www.vecagroup.com

PROJECT	FITSTOP EARLWOOD 335 Homer Street Earlwood NSW 2206 (Approx. 218sqm)
DRAWING	**ELECTRICAL PLAN(PART A) INC. POWER + DATA**
DATE	16th April 2025
DESIGNED	EL
DRAWN	EB
SCALE	1/50 @ A2
PROJECT No.	FLEA_3790
DRAWING No.	VECA_FIEA3790_ **109A**

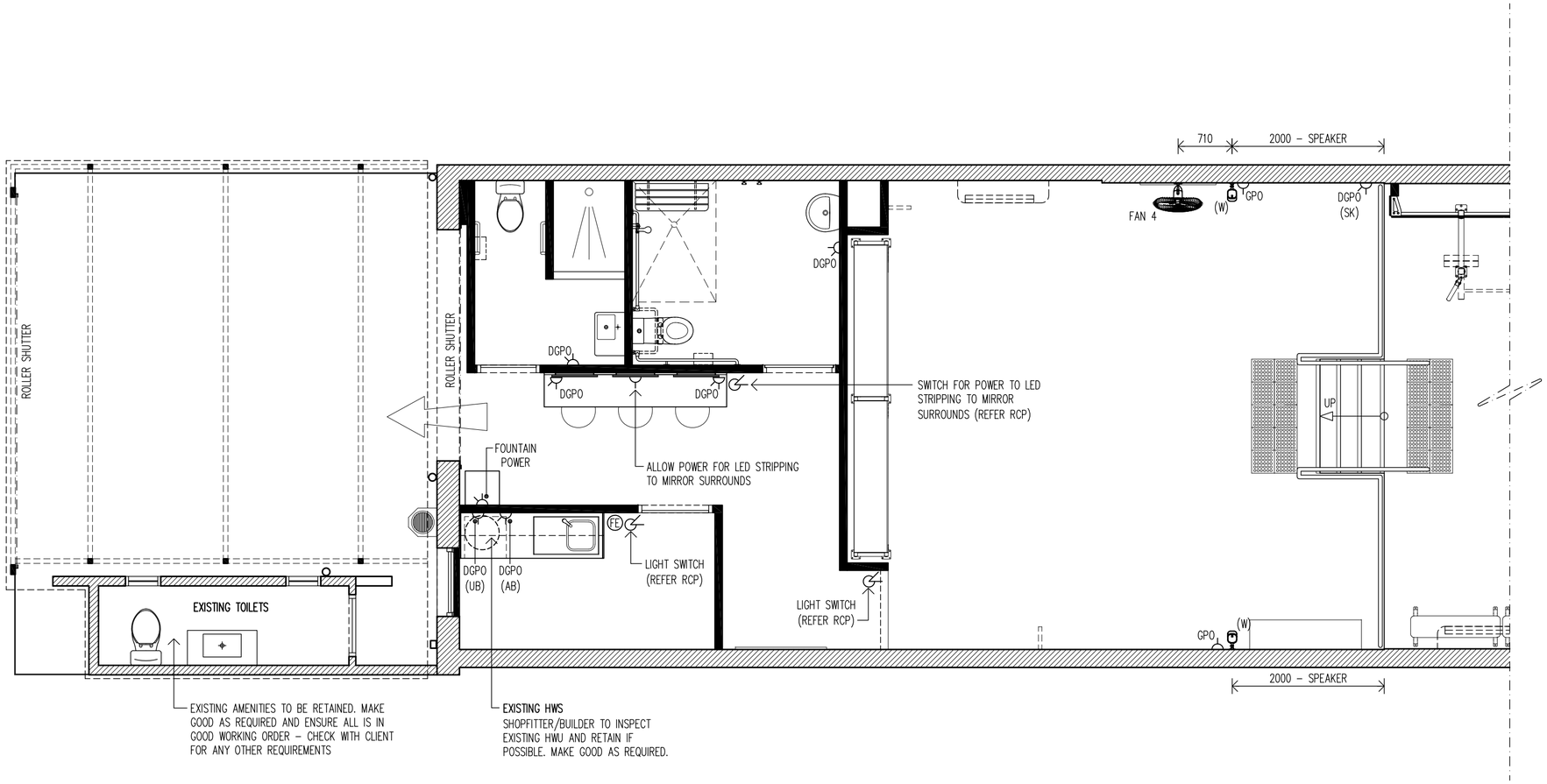

1 ELECTRICAL PLAN – INCLUDING POWER & DATA (PART B)

1/50 @ A2

ELECTRICAL LEGENDS

DGPO — **DGPO** DOUBLE GENERAL PURPOSE OUTLET (FIT FOR PURPOSE AS NOTED)
(AB) – ABOVE BENCH
(UB) – UNDER BENCH
(SK) – SKIRTING

GPO — **GPO** SINGLE GENERAL PURPOSE OUTLET (FIT FOR PURPOSE AS NOTED)

SWITCH (REFER RCP)

DATA CAT6 (FIT TO PURPOSE AS NOTED)

(B)/(W) — **SPEAKERS**
FITSTOP STANDARD – MOUNTING HEIGHT IS CH–3200 TO UNDERSIDE – ALLOW FOR 1x POWER PER SPEAKER, WIRED BACK TO UNDER RECEPTION DESK (REFER SEPARATE TYPICAL DETAILS)
– (B) BLACK FINISH or (W) WHITE FINISH – QTY: 4x

GENERAL NOTES:

– PROVIDE ONE CEILING SENSOR TO ACTIVATE LIGHTS (& EXHAUST), FIT FOR PURPOSE, IN EACH AMENITIES COMPARTMENT (REFER DRAWINGS)
– PROVIDE ALL SWITCHES, POWER/DATA POINTS, AS REQUIRED TO FITSTOP STANDARDS AND AS SHOWN
– ALL SWITCHES, POWER/DATA POINTS, ETC TO BE CLIPSAL C2000 CLASSIC SERIES (COVER PLATES COLOUR TO MATCH BACKGROUND FINISH COLOUR)
– ALLOW FOR SEPARATE CIRCUITS AS REQUIRED, FIT TO PURPOSE, FOR ALL POWER AND LIGHTING

©2025 – THESE DESIGNS, DRAWINGS & SPECIFICATIONS ARE COPYRIGHT & CONFIDENTIAL AND THE PROPERTY OF VECA Group AND MUST NOT BE USED, REPRODUCED OR COPIED WHOLLY OR IN PART WITHOUT THE PERMISSION OF VECA Group. THESE DRAWINGS ARE DESIGN ONLY. SELECTED CONTRACTOR TO PRODUCE ITS OWN SHOP DRAWINGS FOR CONSTRUCTION.
ALL DIMENSIONS MUST BE CHECKED ON SITE BEFORE COMMENCEMENT OF CONSTRUCTION OR MANUFACTURING OF ANY ITEM. USE FIGURED DIMENSIONS IN PREFERENCE TO SCALED DIMENSIONS. ALL WORKS SHALL COMPLY WITH RELEVANT LOCAL HEALTH & COUNCIL REQUIREMENTS, LOCAL BUILDING REGULATIONS AND RELEVANT AUSTRALIAN CODES AND STANDARDS.
ANY DISCREPANCIES TO BE REPORTED TO VECA Group FOR CORRECTION PRIOR TO ANY WORK ON SITE.

ISSUE	AMENDMENTS	DATE
A	LANDLORD/CLIENT APPROVAL	16.04.2025

CLIENT:
FITSTOP.
FITSTOP Australia
51 Manilla Street
EAST BRISBANE QLD 4169
AUSTRALIA
Mobile: 0409 907 269 (Nicole Donohue)
EMAIL: nicole.donohue@fitstop.com

DESIGNER:
VECA Group
ABN 92 473 736 223
MOBILE: 0401 657 190 (Eric Lacour)
Registered Building Practitioner (VIC) - # CDP-JD 54352
Building Services Provider/Building Designer Ltd. (TAS)
License #484351416
EMAIL: veca@vecagroup.com
WEB: https://www.vecagroup.com

PROJECT	FITSTOP EARLWOOD 335 Homer Street Earlwood NSW 2206 (Approx. 218sqm)
DRAWING	**ELECTRICAL PLAN(PART B) INC. POWER + DATA**
DATE	16th April 2025
DESIGNED	EL
DRAWN	EB
SCALE	1/50 @ A2
PROJECT No.	FI.EA.3790
DRAWING No.	VECA_FIEA3790_ **110A**

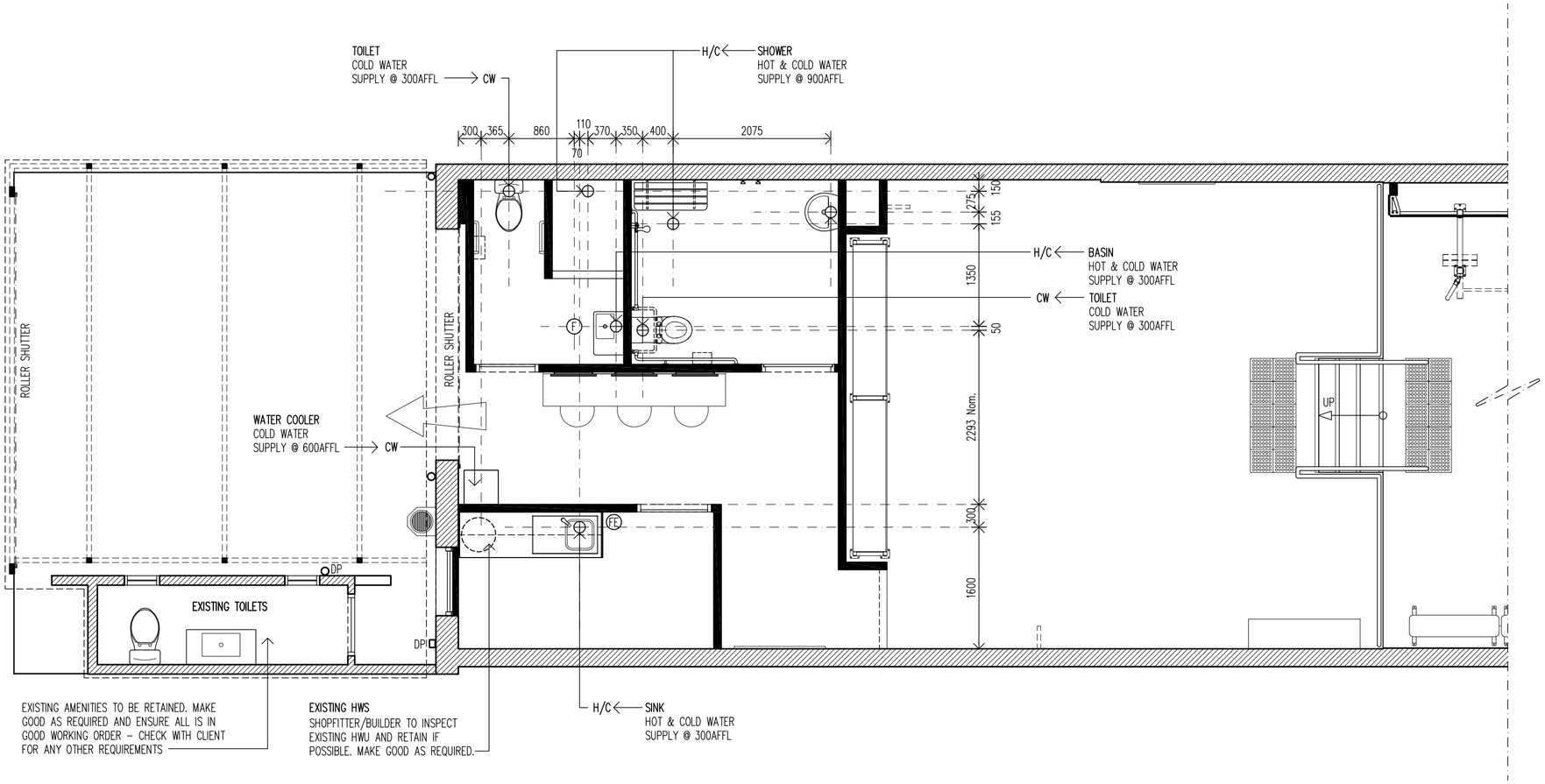

THIS DRAWING IS INDICATIVE ONLY - REFER TO ENGINEERED HYDRAULICS LAYOUT (BY OTHERS) FOR FINAL POSITION OF ALL SERVICES POINTS

1 HYDRAULICS LAYOUT

1/50 @ A2

IMPORTANT NOTES:

- ALL PLUMBING/GAS SERVICES POINTS ARE INDICATIVE ONLY (ALL SERVICES AS PER MANUFACTURER'S WRITTEN INSTRUCTIONS)

- ALL HYDRAULICS REQUIREMENTS TO BE CONFIRMED ON SITE TO SUIT EQUIPMENT AND IN ACCORDANCE WITH AUSTRALIAN STANDARDS, LOCAL AUTHORITY GUIDELINES & LESSOR REQUIREMENTS

- SUPPLY & INSTALL HOT & COLD WATER RETICULATION TO ALL FIXTURES & EQUIPMENT - WHERE PRACTICABLE, ALL PIPEWORK TO BE CONCEALED WHERE POSSIBLE IN WALL/FLOOR CAVITIES IN ACCORDANCE WITH THE BUILDING CODE OF AUSTRALIA

- PIPEWORK TO FIXTURES WHERE VISIBLE SHALL BE CHROMIUM PLATED (CO-ORDINATE WITH DESIGNER) - ALL HOT WATER PIPEWORK TO BE FULLY INSULATED TO AS3500

- ALL SINKS & HAND BASINS TO BE PROVIDED WITH HOT & COLD WATER

- ENSURE COMPLIANCE WITH THE PLANNING AUTHORITY, FIRE SERVICES AND WATER REGULATIONS (IN PARTICULAR FOR GREASE TRAP REQUIREMENTS)

- ANY SPECIFIC REQUIREMENTS IMPLEMENTED BY ANY LOCAL AUTHORITIES ARE TO BE CARRIED OUT AS INSTRUCTED

- SUPPLY AND INSTALL OF ALL PLUMBING FIXTURES SHALL BE IN COMPLIANCE WITH AS/NZS 3500 SET (PARTS 0-4)-2021 "PLUMBING AND DRAINAGE SET"

- ENSURE MAIN WATER FEED IS SIZED AS REQUIRED TO PROVIDE ADEQUATE PRESSURE TO SERVICE ALL AMENITIES

PLUMBING SERVICES LEGEND

⊕	50mm OR 100mm DIAM. WASTE POINT TO SEWER
(F)	100mm DIAM. FLOOR WASTE TO SEWER
(FE)	FIRE EXTINGUISHER/BLANKET
HW	HOT WATER SUPPLY
CW	COLD WATER SUPPLY
H/C	HOT & COLD WATER SUPPLY

©2025 - THESE DESIGNS, DRAWINGS & SPECIFICATIONS ARE COPYRIGHT & CONFIDENTIAL AND THE PROPERTY OF VECA Group AND MUST NOT BE USED, REPRODUCED OR COPIED WHOLLY OR IN PART WITHOUT THE PERMISSION OF VECA Group. THESE DRAWINGS ARE DESIGN ONLY. SELECTED CONTRACTOR TO PRODUCE ITS OWN SHOP DRAWINGS FOR CONSTRUCTION.
ALL DIMENSIONS MUST BE CHECKED ON SITE BEFORE COMMENCEMENT OF CONSTRUCTION OR MANUFACTURING OF ANY ITEM. USE FIGURED DIMENSIONS IN PREFERENCE TO SCALED DIMENSIONS. ALL WORKS SHALL COMPLY WITH RELEVANT LOCAL HEALTH & COUNCIL REQUIREMENTS, LOCAL BUILDING REGULATIONS AND RELEVANT AUSTRALIAN CODES AND STANDARDS.
ANY DISCREPANCIES TO BE REPORTED TO VECA Group FOR CORRECTION PRIOR TO ANY WORK ON SITE.

ISSUE	AMENDMENTS	DATE
A	LANDLORD/CLIENT APPROVAL	16.04.2025

CLIENT:
FITSTOP.
FITSTOP Australia
51 Manilla Street
EAST BRISBANE QLD 4169
AUSTRALIA
Mobile: 0409 907 269 (Nicole Donohue)
EMAIL: nicole.donohue@fitstop.com

DESIGNER:
VECA Group
ABN 92 473 736 223
MOBILE: 0401 657 190 (Eric Lacour)
Registered Building Practitioner (VIC) - # CDP-ID 54352
Building Services Provider/Building Designer Ltd. (TAS)
License #484351416
EMAIL: veca@vecagroup.com
WEB: https://www.vecagroup.com

PROJECT	FITSTOP EARLWOOD 335 Homer Street Earlwood NSW 2206 (Approx. 218sqm)
DRAWING	HYDRAULIC SERVICES LAYOUT
DATE	16th April 2025
DESIGNED	EL
DRAWN	EB
SCALE	1/50 @ A2
PROJECT No.	FI.EA.3790
DRAWING No.	VECA_FIEA3790_ 111A

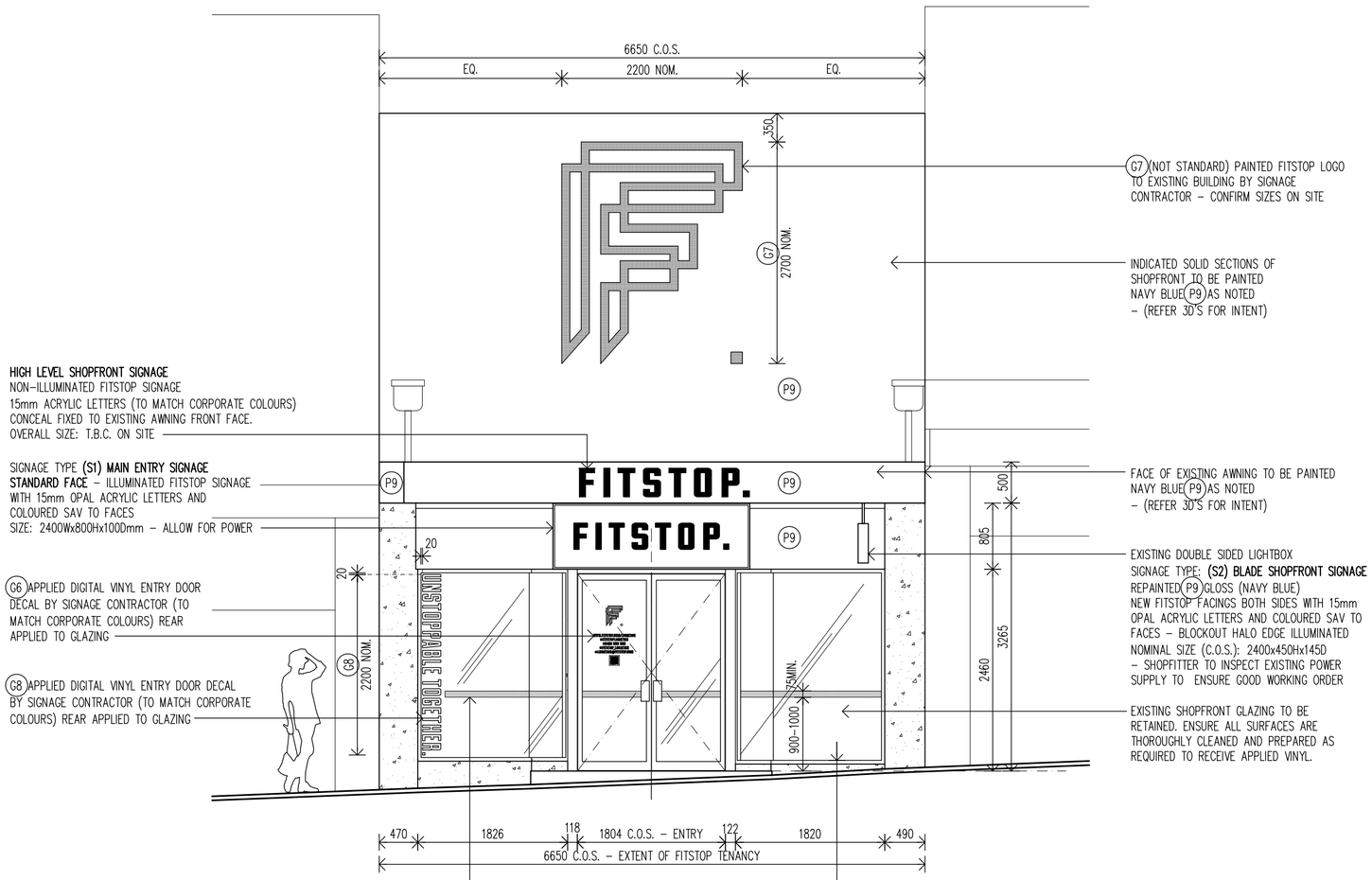

HIGH LEVEL SHOPFRONT SIGNAGE
NON-ILLUMINATED FITSTOP SIGNAGE
15mm ACRYLIC LETTERS (TO MATCH CORPORATE COLOURS)
CONCEAL FIXED TO EXISTING AWNING FRONT FACE.
OVERALL SIZE: T.B.C. ON SITE

SIGNAGE TYPE **(S1) MAIN ENTRY SIGNAGE**
STANDARD FACE - ILLUMINATED FITSTOP SIGNAGE
WITH 15mm OPAL ACRYLIC LETTERS AND
COLOURED SAV TO FACES
SIZE: 2400Wx800Hx100Dmm - ALLOW FOR POWER

G6 APPLIED DIGITAL VINYL ENTRY DOOR
DECAL BY SIGNAGE CONTRACTOR (TO
MATCH CORPORATE COLOURS) REAR
APPLIED TO GLAZING

G8 APPLIED DIGITAL VINYL ENTRY DOOR DECAL
BY SIGNAGE CONTRACTOR (TO MATCH CORPORATE
COLOURS) REAR APPLIED TO GLAZING

G7 (NOT STANDARD) PAINTED FITSTOP LOGO
TO EXISTING BUILDING BY SIGNAGE
CONTRACTOR - CONFIRM SIZES ON SITE

INDICATED SOLID SECTIONS OF
SHOPFRONT TO BE PAINTED
NAVY BLUE P9 AS NOTED
- (REFER 3D'S FOR INTENT)

FACE OF EXISTING AWNING TO BE PAINTED
NAVY BLUE P9 AS NOTED
- (REFER 3D'S FOR INTENT)

EXISTING DOUBLE SIDED LIGHTBOX
SIGNAGE TYPE: **(S2) BLADE SHOPFRONT SIGNAGE**
REPAINTED P9 GLOSS (NAVY BLUE)
NEW FITSTOP FACINGS BOTH SIDES WITH 15mm
OPAL ACRYLIC LETTERS AND COLOURED SAV TO
FACES - BLOCKOUT HALO EDGE ILLUMINATED
NOMINAL SIZE (C.O.S.): 2400x450Hx145D
- SHOPFITTER TO INSPECT EXISTING POWER
SUPPLY TO ENSURE GOOD WORKING ORDER

EXISTING SHOPFRONT GLAZING TO BE
RETAINED. ENSURE ALL SURFACES ARE
THOROUGHLY CLEANED AND PREPARED AS
REQUIRED TO RECEIVE APPLIED VINYL.

ALLOW FOR G9 VISUAL INDICATOR TREATMENT
(SOLID, NON TRANSPARENT FITSTOP LOGOS) TO
GLAZING IN ACCORDANCE WITH AS1428.1:2009 (6.6)
- BY SIGNAGE CONTRACTOR

ALL SHOPFRONT GLAZING CHANNELS (UNLESS
OTHERWISE NOTED) TO BE RE-SPRAYED P9
- ENSURE ALL SURFACES ARE THOROUGHLY
CLEANED AND PREPARED AS REQUIRED TO RECEIVE
NEW PAINT FINISH

A SHOPFRONT ELEVATION
1/50 @ A2

©2025 - THESE DESIGNS, DRAWINGS & SPECIFICATIONS ARE COPYRIGHT & CONFIDENTIAL AND THE PROPERTY OF VECA Group AND MUST NOT BE USED, REPRODUCED OR COPIED WHOLLY OR IN PART WITHOUT THE PERMISSION OF VECA Group. THESE DRAWINGS ARE DESIGN ONLY. SELECTED CONTRACTOR TO PRODUCE ITS OWN SHOP DRAWINGS FOR CONSTRUCTION.
ALL DIMENSIONS MUST BE CHECKED ON SITE BEFORE COMMENCEMENT OF CONSTRUCTION OR MANUFACTURING OF ANY ITEM. USE FIGURED DIMENSIONS IN PREFERENCE TO SCALED DIMENSIONS. ALL WORKS SHALL COMPLY WITH RELEVANT LOCAL HEALTH & COUNCIL REQUIREMENTS, LOCAL BUILDING REGULATIONS AND RELEVANT AUSTRALIAN CODES AND STANDARDS.
ANY DISCREPANCIES TO BE REPORTED TO VECA Group FOR CORRECTION PRIOR TO ANY WORK ON SITE.

ISSUE	AMENDMENTS	DATE
A	LANDLORD/CLIENT APPROVAL	16.04.2025

CLIENT:
FITSTOP.
FITSTOP Australia
51 Manilla Street
EAST BRISBANE QLD 4169
AUSTRALIA
Mobile: 0409 907 269 (Nicole Donohue)
EMAIL: nicole.donohue@fitstop.com

DESIGNER:
VECA Group
ABN 92 473 736 223
MOBILE: 0401 657 190 (Eric Lacour)
Registered Building Practitioner (VIC) - # CDP-ID 54352
Building Services Provider/Building Designer Ltd. (TAS)
License #484351416
EMAIL: veca@vecagroup.com
WEB: https://www.vecagroup.com

PROJECT	FITSTOP EARLWOOD 335 Homer Street Earlwood NSW 2206 (Approx. 218sqm)
DRAWING	**SHOPFRONT ELEVATION (A)**
DATE	16th April 2025
DESIGNED	EL
DRAWN	EB
SCALE	1/50 @ A2
PROJECT No.	FI.EA.3790
DRAWING No.	VECA_FIEA3790_ **112A**

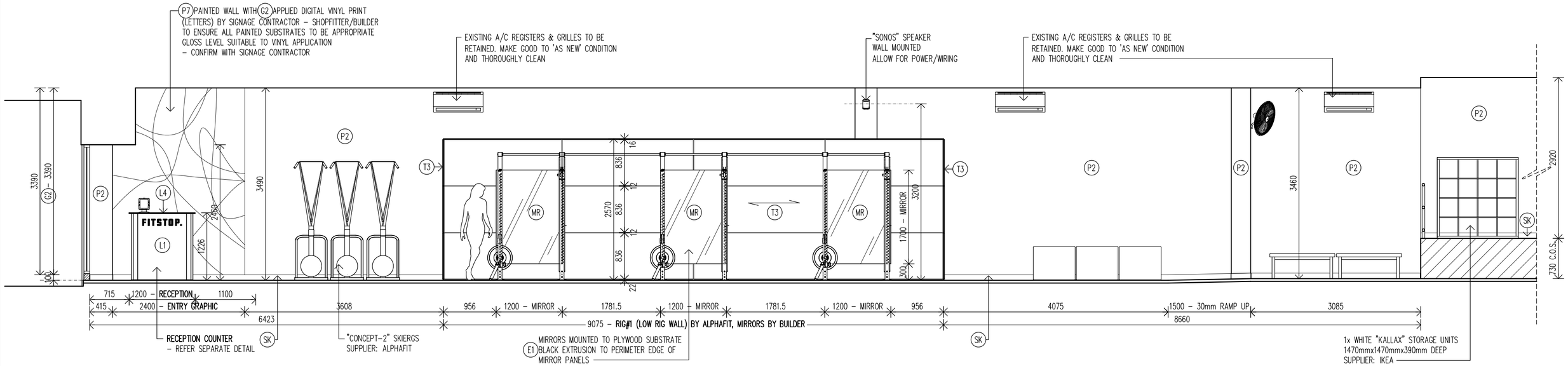

B INTERNAL ELEVATION
1/50 @ A2

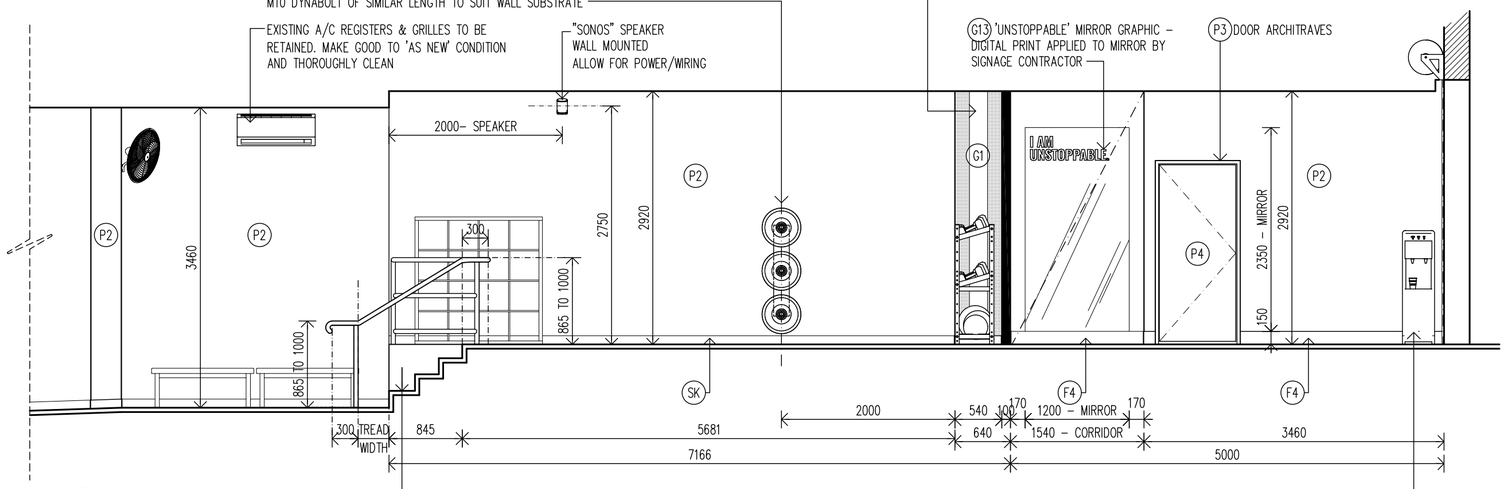

C INTERNAL ELEVATION
1/50 @ A2

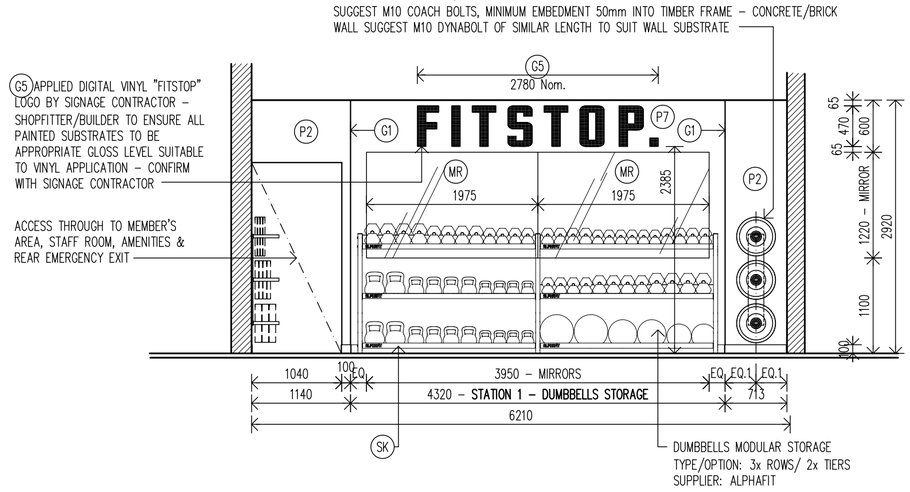

D INTERNAL ELEVATION
1/50 @ A2

©2025 – THESE DESIGNS, DRAWINGS & SPECIFICATIONS ARE COPYRIGHT & CONFIDENTIAL AND THE PROPERTY OF VECA Group AND MUST NOT BE USED, REPRODUCED OR COPIED WHOLLY OR IN PART WITHOUT THE PERMISSION OF VECA Group. THESE DRAWINGS ARE DESIGN ONLY. SELECTED CONTRACTOR TO PRODUCE ITS OWN SHOP DRAWINGS FOR CONSTRUCTION.
ALL DIMENSIONS MUST BE CHECKED ON SITE BEFORE COMMENCEMENT OF CONSTRUCTION OR MANUFACTURING OF ANY ITEM. USE FIGURED DIMENSIONS IN PREFERENCE TO SCALED DIMENSIONS. ALL WORKS SHALL COMPLY WITH RELEVANT LOCAL HEALTH & COUNCIL REQUIREMENTS, LOCAL BUILDING REGULATIONS AND RELEVANT AUSTRALIAN CODES AND STANDARDS.
ANY DISCREPANCIES TO BE REPORTED TO VECA Group FOR CORRECTION PRIOR TO ANY WORK ON SITE.

ISSUE	AMENDMENTS	DATE
A	LANDLORD/CLIENT APPROVAL	16.04.2025

CLIENT:
FITSTOP.
FITSTOP Australia
51 Manilla Street
EAST BRISBANE QLD 4169
AUSTRALIA
Mobile: 0409 907 269 (Nicole Donohue)
EMAIL: nicole.donohue@fitstop.com

DESIGNER:
VECA Group
ABN 92 473 736 223
MOBILE: 0401 657 190 (Eric Lacour)
Registered Building Practitioner (VIC) - # CDP-ID 54352
Building Services Provider/Building Designer Ltd. (TAS)
License #484351416
EMAIL: veca@vecagroup.com
WEB: https://www.vecagroup.com

PROJECT	FITSTOP EARLWOOD 335 Homer Street Earlwood NSW 2206 (Approx. 218sqm)
DRAWING	INTERNAL ELEVATIONS (B), (C) + (D)
DATE	16th April 2025
DESIGNED	EL
DRAWN	EB
SCALE	1/50 @ A2
PROJECT No.	FI.EA.3790
DRAWING No.	VECA_FIEA3790_ **113A**

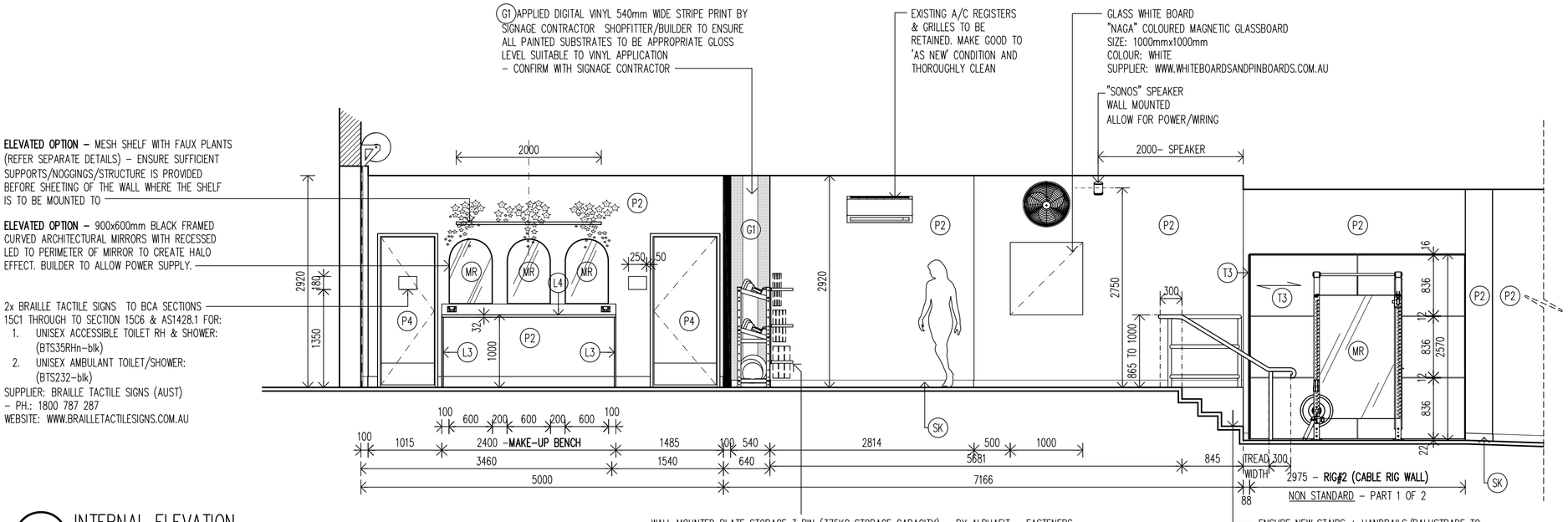

E INTERNAL ELEVATION
1/50 @ A2

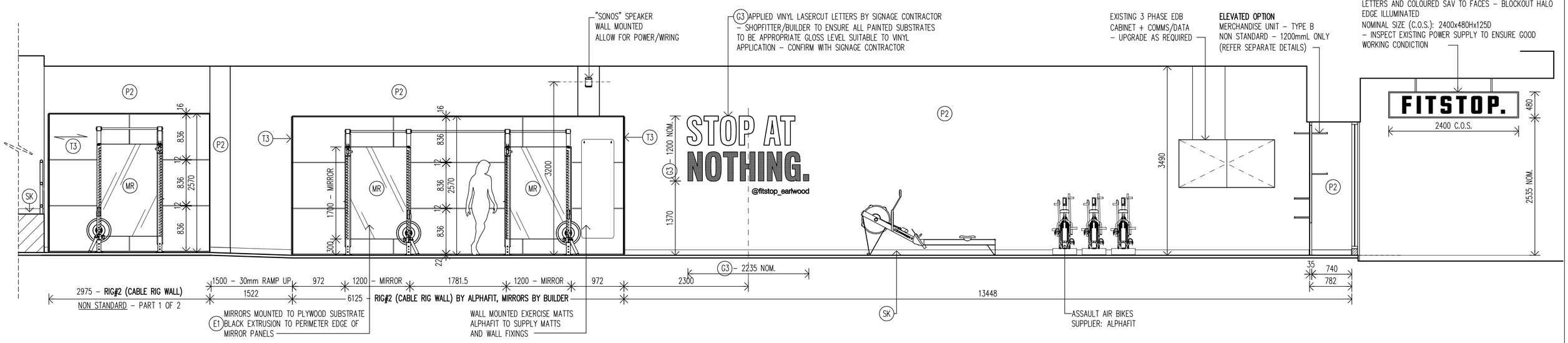

F INTERNAL ELEVATION
1/50 @ A2

©2025 – THESE DESIGNS, DRAWINGS & SPECIFICATIONS ARE COPYRIGHT & CONFIDENTIAL AND THE PROPERTY OF VECA Group AND MUST NOT BE USED, REPRODUCED OR COPIED WHOLLY OR IN PART WITHOUT THE PERMISSION OF VECA Group. THESE DRAWINGS ARE DESIGN ONLY. SELECTED CONTRACTOR TO PRODUCE ITS OWN SHOP DRAWINGS FOR CONSTRUCTION.
ALL DIMENSIONS MUST BE CHECKED ON SITE BEFORE COMMENCEMENT OF CONSTRUCTION OR MANUFACTURING OF ANY ITEM. USE FIGURED DIMENSIONS IN PREFERENCE TO SCALED DIMENSIONS. ALL WORKS SHALL COMPLY WITH RELEVANT LOCAL HEALTH & COUNCIL REQUIREMENTS, LOCAL BUILDING REGULATIONS AND RELEVANT AUSTRALIAN CODES AND STANDARDS.
ANY DISCREPANCIES TO BE REPORTED TO VECA Group FOR CORRECTION PRIOR TO ANY WORK ON SITE.

ISSUE	AMENDMENTS	DATE
A	LANDLORD/CLIENT APPROVAL	16.04.2025

CLIENT:
FITSTOP.
FITSTOP Australia
51 Manilla Street
EAST BRISBANE QLD 4169
AUSTRALIA
Mobile: 0409 907 269 (Nicole Donohue)
EMAIL: nicole.donohue@fitstop.com

DESIGNER:
VECA Group
ABN 92 473 736 223
MOBILE: 0401 657 190 (Eric Lacour)
Registered Building Practitioner (VIC) - # CDP-ID 54352
Building Services Provider/Building Designer Ltd. (TAS)
License #484351416
EMAIL: veca@vecagroup.com
WEB: https://www.vecagroup.com

PROJECT	FITSTOP EARLWOOD 335 Homer Street Earlwood NSW 2206 (Approx. 218sqm)
DRAWING	INTERNAL ELEVATIONS (E) + (F)
DATE	16th April 2025
DESIGNED	EL
DRAWN	EB
SCALE	1/50 @ A2
PROJECT No.	FI.EA.3790
DRAWING No.	VECA_FIEA3790_ **114A**

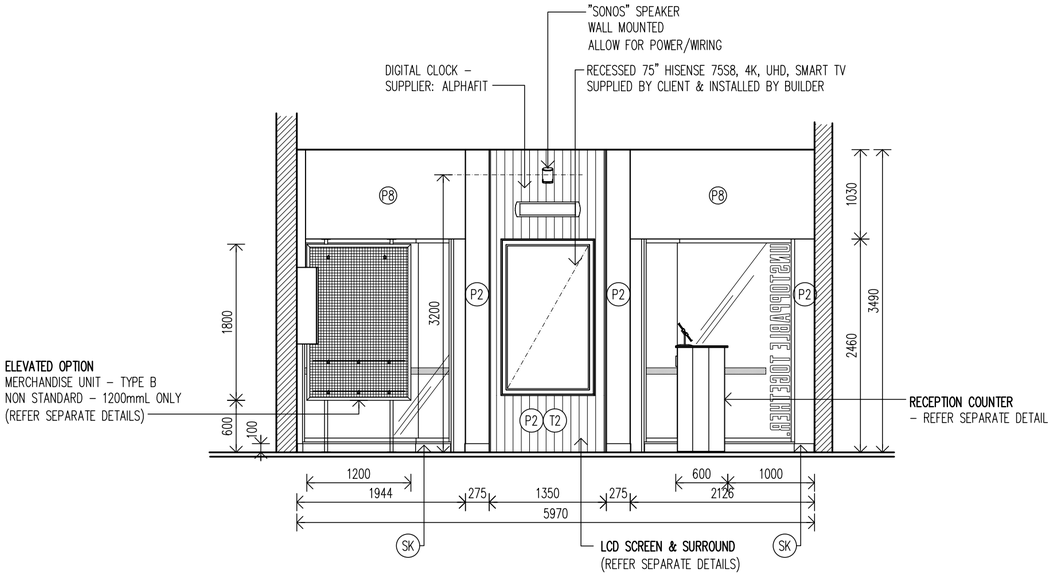

G INTERNAL ELEVATION
1/50 @ A2

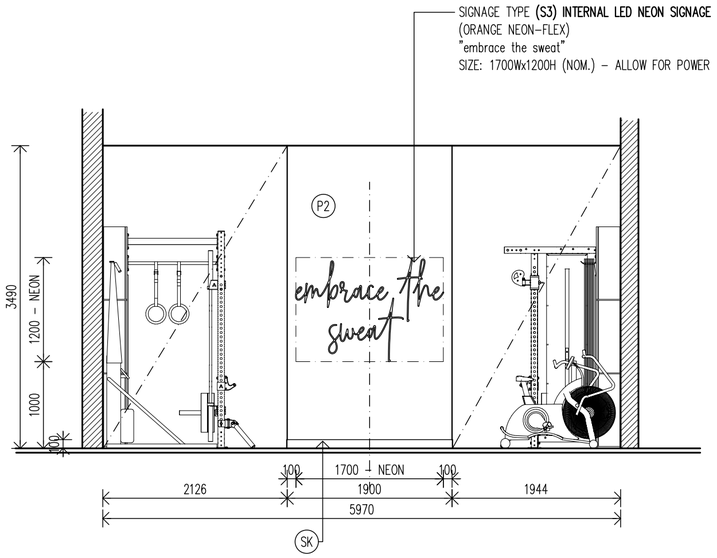

H INTERNAL ELEVATION
1/50 @ A2

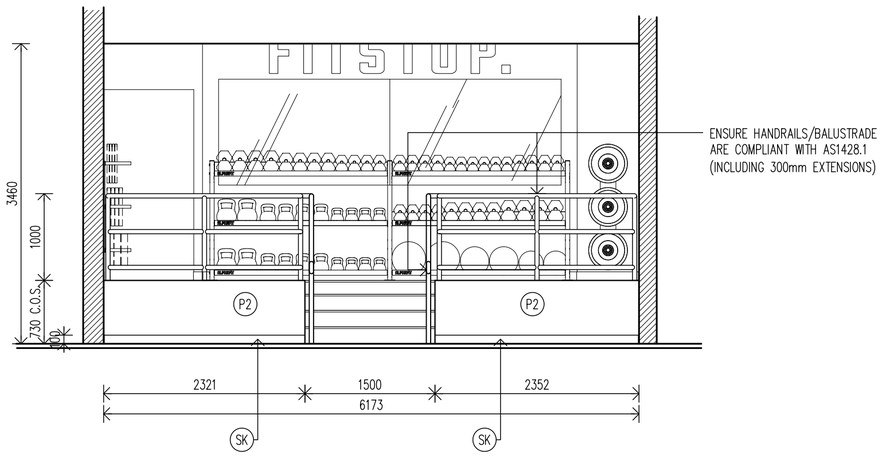

i INTERNAL ELEVATION
1/50 @ A2

©2025 – THESE DESIGNS, DRAWINGS & SPECIFICATIONS ARE COPYRIGHT & CONFIDENTIAL AND THE PROPERTY OF VECA Group AND MUST NOT BE USED, REPRODUCED OR COPIED WHOLLY OR IN PART WITHOUT THE PERMISSION OF VECA Group. THESE DRAWINGS ARE DESIGN ONLY. SELECTED CONTRACTOR TO PRODUCE ITS OWN SHOP DRAWINGS FOR CONSTRUCTION.
ALL DIMENSIONS MUST BE CHECKED ON SITE BEFORE COMMENCEMENT OF CONSTRUCTION OR MANUFACTURING OF ANY ITEM. USE FIGURED DIMENSIONS IN PREFERENCE TO SCALED DIMENSIONS. ALL WORKS SHALL COMPLY WITH RELEVANT LOCAL HEALTH & COUNCIL REQUIREMENTS, LOCAL BUILDING REGULATIONS AND RELEVANT AUSTRALIAN CODES AND STANDARDS.
ANY DISCREPANCIES TO BE REPORTED TO VECA Group FOR CORRECTION PRIOR TO ANY WORK ON SITE.

ISSUE	AMENDMENTS	DATE
A	LANDLORD/CLIENT APPROVAL	16.04.2025

CLIENT:
FITSTOP.
FITSTOP Australia
51 Manilla Street
EAST BRISBANE QLD 4169
AUSTRALIA
Mobile: 0409 907 269 (Nicole Donohue)
EMAIL: nicole.donohue@fitstop.com

DESIGNER:
VECA Group
ABN 92 473 736 223
MOBILE: 0401 657 190 (Eric Lacour)
Registered Building Practitioner (VIC) - # CDP-JD 54352
Building Services Provider/Building Designer Ltd. (TAS)
License #484351416
EMAIL: veca@vecagroup.com
WEB: https://www.vecagroup.com

PROJECT	FITSTOP EARLWOOD 335 Homer Street Earlwood NSW 2206 (Approx. 218sqm)
DRAWING	INTERNAL ELEVATIONS (G), (H) + (i)
DATE	16th April 2025
DESIGNED	EL
DRAWN	EB
SCALE	1/50 @ A2
PROJECT No.	FI.EA.3790
DRAWING No.	VECA_FIEA3790_ 115A

FINISHES SCHEDULE:

(L1) FEATURE LAMINATE
COLOUR: "POLAR WHITE" #205 NATURAL FINISH
SUPPLIER: LAMINEX

(L4) **RECEPTION COUNTER**
LAMINEX 16mm PREFINISHED BOARD
COLOUR: 'ALASKAN' NATURAL FINISH
1mm PVC EDGING TO MATCH

ELETRICAL LEGEND:
- DOUBLE GPO (WITH USB POWER OUTLET WHERE NOTED)
- SWITCH (WHERE NOTED)

IMPORTANT NOTE:
STANDARD FITSTOP DETAIL – HOWEVER SHOPFITTER TO REFER TO PLAN LAYOUT TO CONFIRM LATERAL POSITION OF UNIT AS WALL LAYOUTS AND CEILING HEIGHTS VARY FROM SITE TO SITE.

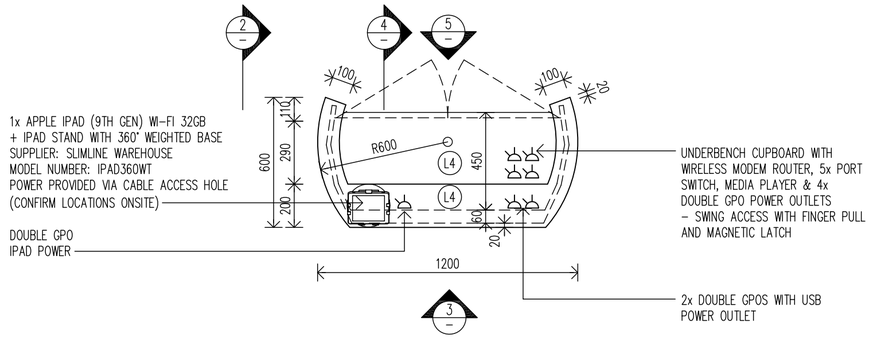

1 RECEPTION – PLAN
1/20 @ A2

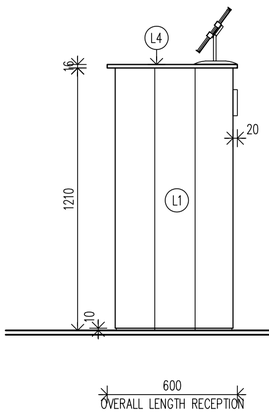

2 SIDE ELEVATION
1/20 @ A2

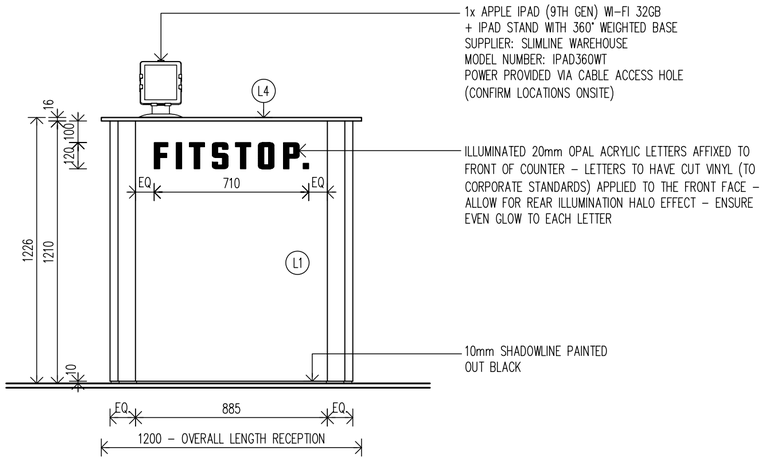

3 RECEPTION – FRONT ELEVATION
1/20 @ A2

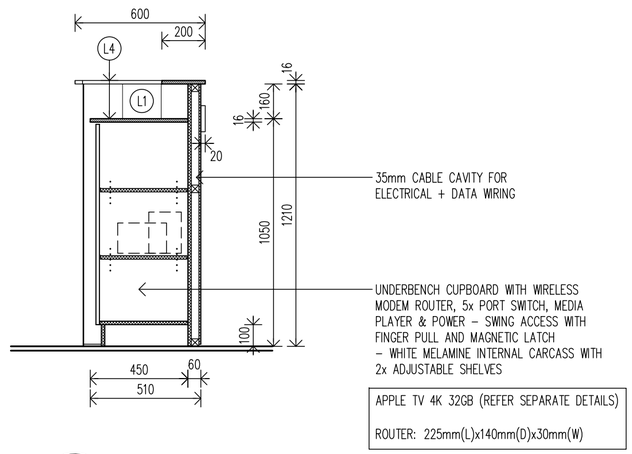

4 SECTION THROUGH
1/20 @ A2

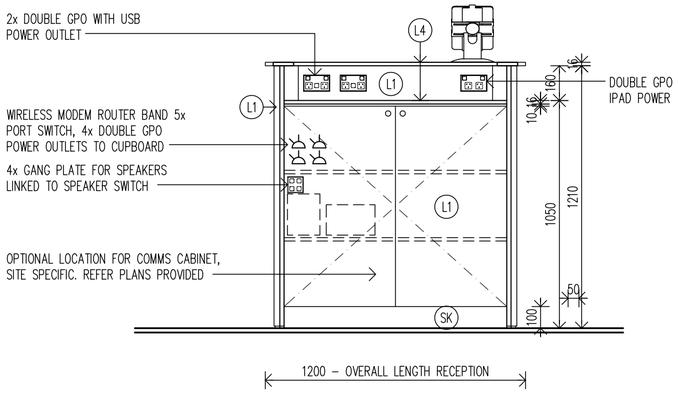

5 RECEPTION – REAR ELEVATION
1/20 @ A2

©2025 – THESE DESIGNS, DRAWINGS & SPECIFICATIONS ARE COPYRIGHT & CONFIDENTIAL AND THE PROPERTY OF VECA Group AND MUST NOT BE USED, REPRODUCED OR COPIED WHOLLY OR IN PART WITHOUT THE PERMISSION OF VECA Group. THESE DRAWINGS ARE DESIGN ONLY. SELECTED CONTRACTOR TO PRODUCE ITS OWN SHOP DRAWINGS FOR CONSTRUCTION.
ALL DIMENSIONS MUST BE CHECKED ON SITE BEFORE COMMENCEMENT OF CONSTRUCTION OR MANUFACTURING OF ANY ITEM. USE FIGURED DIMENSIONS IN PREFERENCE TO SCALED DIMENSIONS. ALL WORKS SHALL COMPLY WITH RELEVANT LOCAL HEALTH & COUNCIL REQUIREMENTS, LOCAL BUILDING REGULATIONS AND RELEVANT AUSTRALIAN CODES AND STANDARDS.
ANY DISCREPANCIES TO BE REPORTED TO VECA Group FOR CORRECTION PRIOR TO ANY WORK ON SITE.

ISSUE	AMENDMENTS	DATE
A	LANDLORD/CLIENT APPROVAL	16.04.2025

CLIENT:
FITSTOP.
FITSTOP Australia
51 Manilla Street
EAST BRISBANE QLD 4169
AUSTRALIA
Mobile: 0409 907 269 (Nicole Donohue)
EMAIL: nicole.donohue@fitstop.com

DESIGNER:
VECA Group
ABN 92 473 736 223
MOBILE: 0401 657 190 (Eric Lacour)
Registered Building Practitioner (VIC) - # CDP-ID 54352
Building Services Provider/Building Designer Ltd. (TAS)
License #484351416
EMAIL: veca@vecagroup.com
WEB: https://www.vecagroup.com

PROJECT	FITSTOP EARLWOOD 335 Homer Street Earlwood NSW 2206 (Approx. 218sqm)
DRAWING	**TYPICAL DETAIL RECEPTION**
DATE	16th April 2025
DESIGNED	EL
DRAWN	EB
SCALE	1/20 @ A2
PROJECT No.	FI.EA.3790
DRAWING No.	VECA_FIEA3790_ **116A**

FINISHES SCHEDULE:

(F4) FLOOR & WALL TILE
600x600x9.5mm FOR WALLS/SPLASHBACKS/FLOORING/SKIRTING
(SKIRTING 150mm HIGH WHEN REQUIRED)
WET AREAS: ALLOW FOR WATERPROOFING TO AS3740 WITH
WATERPROOFING MEMBRANES AS REQUIRED TO AS/NZS 4858
NAME: "URBAN CEMENT NATURAL MATT" SKU: 713966 (P4)
GROUT COLOUR TO MATCH
SUPPLIER: JOHNSON TILES
CONTACT: LEANNE CARLTON – PH: 0429 651 985
(APPOINTED CONTRACTOR TO INITIALLY CONTACT FITSTOP PROJECT MANAGER TO ACCESS SECURED FIXED PRICING)

(L3) FEATURE LAMINATE
COLOUR: "BLACK" #460 NATURAL FINISH
SUPPLIER: LAMINEX

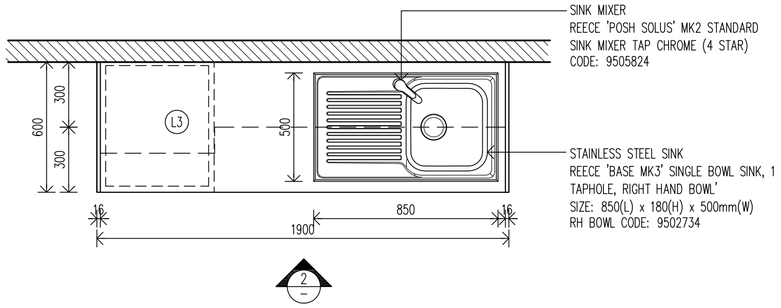

1 TYPICAL KITCHENETTE – PLAN
1/20 @ A2

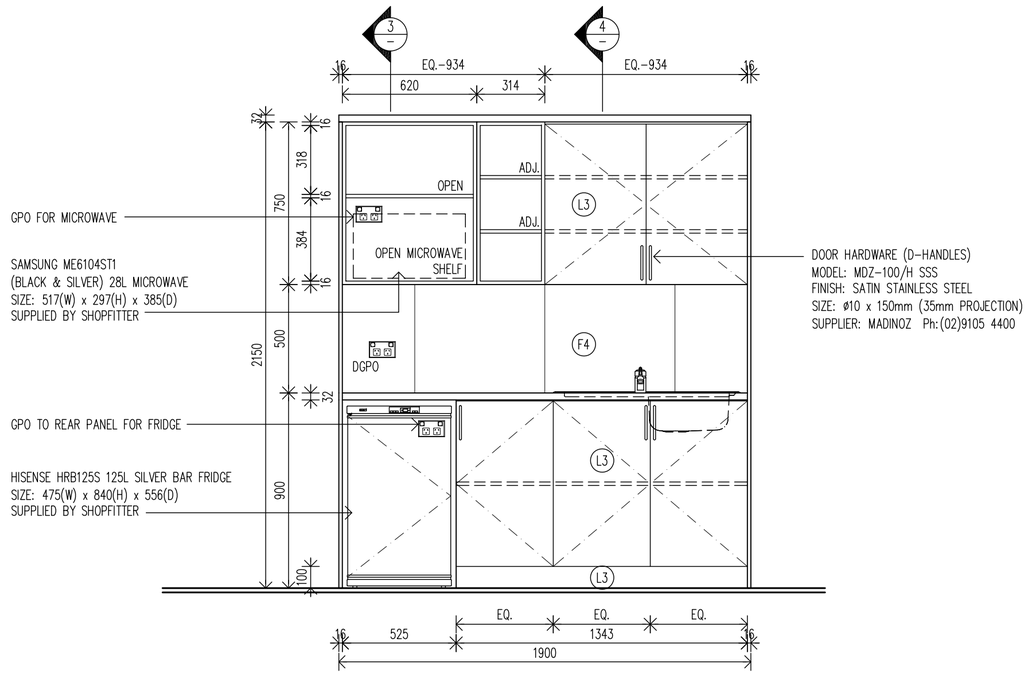

2 TYPICAL KITCHENETTE – ELEVATION
1/20 @ A2

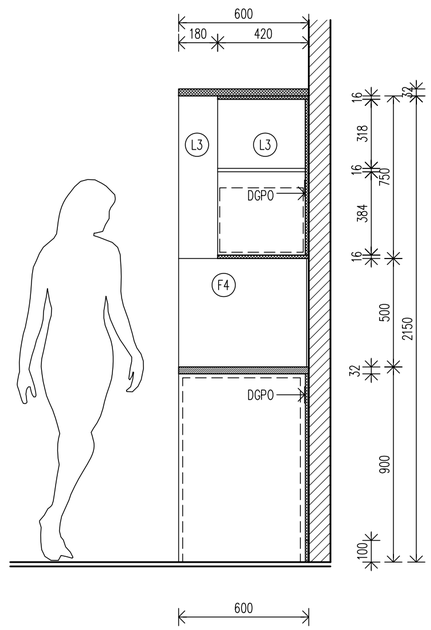

3 SECTION THROUGH
1/20 @ A2

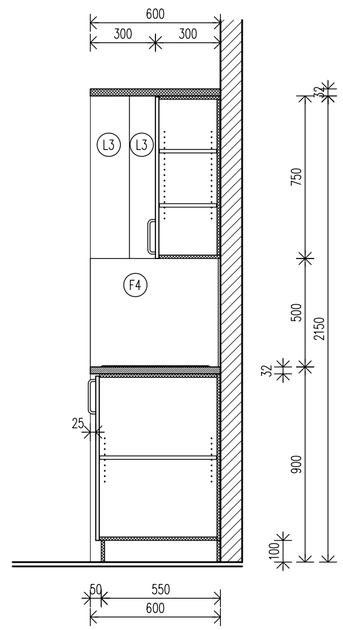

4 SECTION THROUGH
1/20 @ A2

©2025 – THESE DESIGNS, DRAWINGS & SPECIFICATIONS ARE COPYRIGHT & CONFIDENTIAL AND THE PROPERTY OF VECA Group AND MUST NOT BE USED, REPRODUCED OR COPIED WHOLLY OR IN PART WITHOUT THE PERMISSION OF VECA Group. THESE DRAWINGS ARE DESIGN ONLY. SELECTED CONTRACTOR TO PRODUCE ITS OWN SHOP DRAWINGS FOR CONSTRUCTION.
ALL DIMENSIONS MUST BE CHECKED ON SITE BEFORE COMMENCEMENT OF CONSTRUCTION OR MANUFACTURING OF ANY ITEM. USE FIGURED DIMENSIONS IN PREFERENCE TO SCALED DIMENSIONS. ALL WORKS SHALL COMPLY WITH RELEVANT LOCAL HEALTH & COUNCIL REQUIREMENTS, LOCAL BUILDING REGULATIONS AND RELEVANT AUSTRALIAN CODES AND STANDARDS.
ANY DISCREPANCIES TO BE REPORTED TO VECA Group FOR CORRECTION PRIOR TO ANY WORK ON SITE.

ISSUE	AMENDMENTS	DATE
A	LANDLORD/CLIENT APPROVAL	16.04.2025

CLIENT:
FITSTOP.
FITSTOP Australia
51 Manilla Street
EAST BRISBANE QLD 4169
AUSTRALIA
Mobile: 0409 907 269 (Nicole Donohue)
EMAIL: nicole.donohue@fitstop.com

DESIGNER:
VECA Group
ABN 92 473 736 223
MOBILE: 0401 657 190 (Eric Lacour)
Registered Building Practitioner (VIC) - # CDP-JD 54352
Building Services Provider/Building Designer Ltd. (TAS)
License #484351416
EMAIL: veca@vecagroup.com
WEB: https://www.vecagroup.com

PROJECT	FITSTOP EARLWOOD 335 Homer Street Earlwood NSW 2206 (Approx. 218sqm)
DRAWING	TYPICAL DETAIL KITCHENETTE
DATE	16th April 2025
DESIGNED	EL
DRAWN	EB
SCALE	1/20 @ A2
PROJECT No.	FI.EA.3790
DRAWING No.	VECA_FIEA3790_ **117A**

FINISHES SCHEDULE:

(P2) DULUX "WHITE ON WHITE" SW1E2 (LOW SHEEN)

(E2) BLACK 15mm or 20mm ALUMINIUM ANGLES
RANGE: METAL MATE – 1.5mm THICK (3m LENGTHS)
COLOUR: STANDARD POWDERCOAT BLACK
SUPPLIER: BUNNINGS

(T2) VJ BOARD WALL LINING (VERTICAL JOINT DIRECTION)
9mm THICK – JOINTS @ 150mm CENTRES
(PANELS ARE 2400x1200)
COLOUR: TO BE PAINTED AS NOMINATED ON ELEVATIONS
NAME: EASY GROOVE 150, PRIMED – SUPPLIER: BUNNINGS

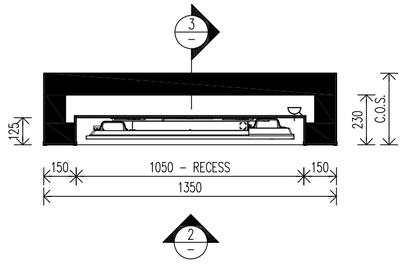

1 LCD SCREEN – PLAN
1/20 @ A2

ELETRICAL LEGEND:
DOUBLE GPO (WITH USB POWER OUTLET WHERE NOTED)
SWITCH (WHERE NOTED)

IMPORTANT NOTE:
STANDARD FITSTOP DETAIL – HOWEVER SHOPFITTER TO REFER TO PLAN LAYOUT TO CONFIRM LATERAL POSITION OF UNIT AS WALL LAYOUTS AND CEILING HEIGHTS VARY FROM SITE TO SITE.

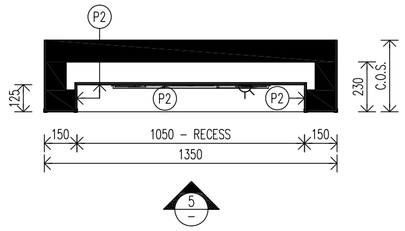

4 LCD SCREEN – PLAN
1/20 @ A2

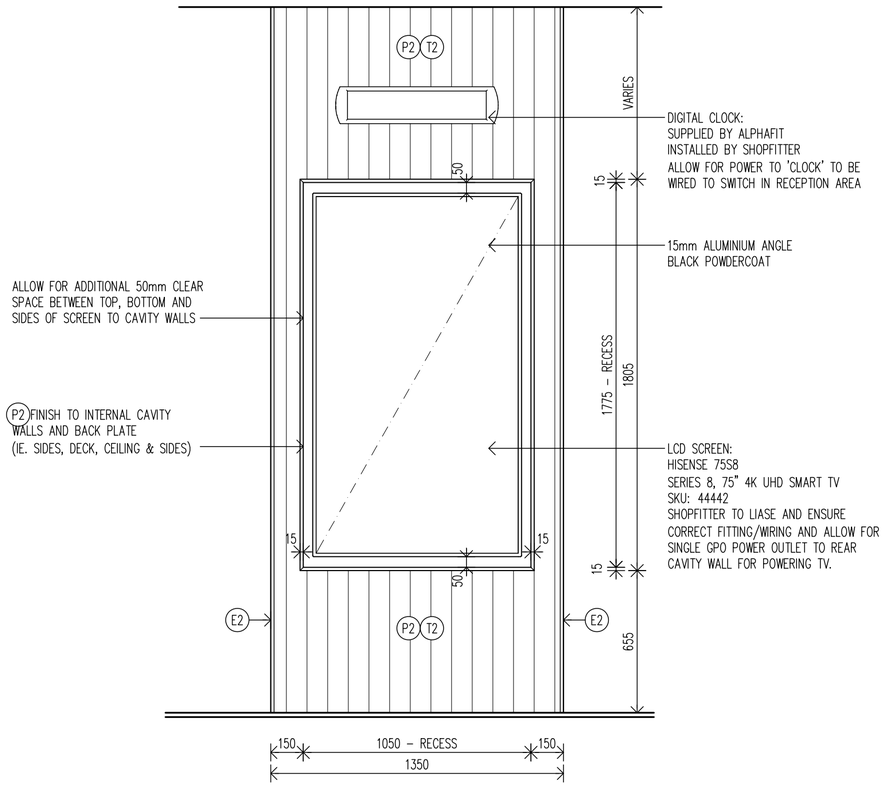

2 LCD SCREEN – FRONT ELEVATION
1/20 @ A2

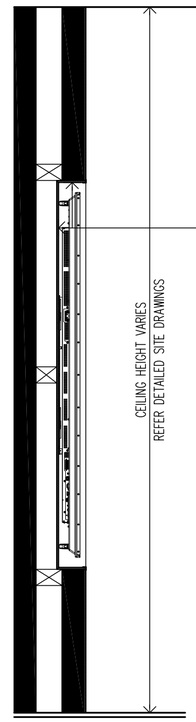

3 SECTION THROUGH
1/20 @ A2

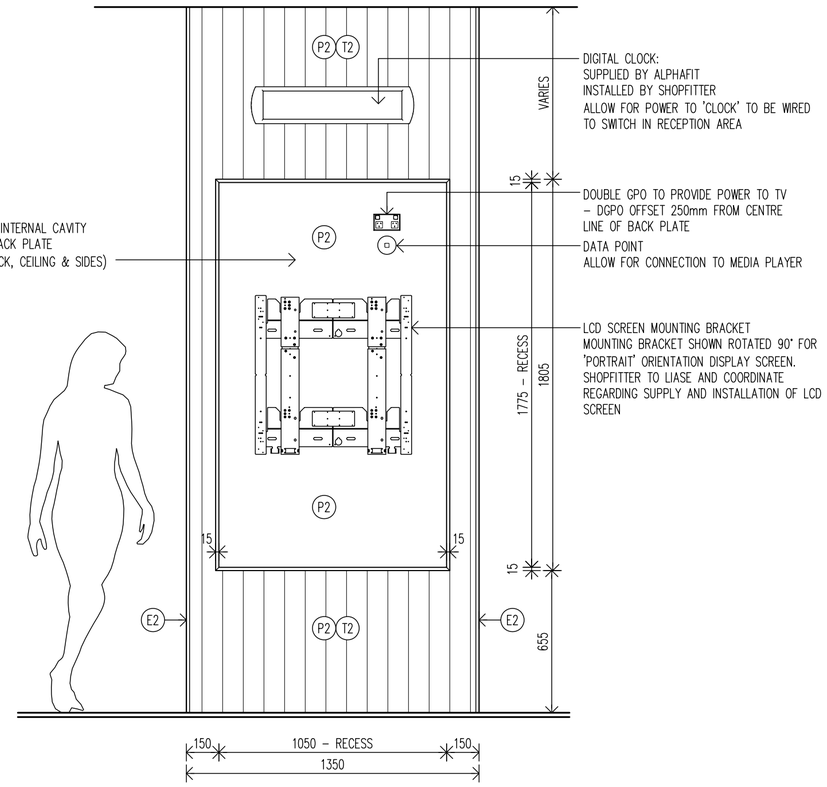

5 LCD SCREEN – MOUNTING DETAIL
1/20 @ A2

©2025 – THESE DESIGNS, DRAWINGS & SPECIFICATIONS ARE COPYRIGHT & CONFIDENTIAL AND THE PROPERTY OF VECA Group AND MUST NOT BE USED, REPRODUCED OR COPIED WHOLLY OR IN PART WITHOUT THE PERMISSION OF VECA Group. THESE DRAWINGS ARE DESIGN ONLY. SELECTED CONTRACTOR TO PRODUCE ITS OWN SHOP DRAWINGS FOR CONSTRUCTION.

ALL DIMENSIONS MUST BE CHECKED ON SITE BEFORE COMMENCEMENT OF CONSTRUCTION OR MANUFACTURING OF ANY ITEM. USE FIGURED DIMENSIONS IN PREFERENCE TO SCALED DIMENSIONS. ALL WORKS SHALL COMPLY WITH RELEVANT LOCAL HEALTH & COUNCIL REQUIREMENTS, LOCAL BUILDING REGULATIONS AND RELEVANT AUSTRALIAN CODES AND STANDARDS.
ANY DISCREPANCIES TO BE REPORTED TO VECA Group FOR CORRECTION PRIOR TO ANY WORK ON SITE.

ISSUE	AMENDMENTS	DATE
A	LANDLORD/CLIENT APPROVAL	16.04.2025

CLIENT:
FITSTOP.
FITSTOP Australia
51 Manilla Street
EAST BRISBANE QLD 4169
AUSTRALIA
Mobile: 0409 907 269 (Nicole Donohue)
EMAIL: nicole.donohue@fitstop.com

DESIGNER:
VECA Group
ABN 92 473 736 223
MOBILE: 0401 657 190 (Eric Lacour)
Registered Building Practitioner (VIC) - # CDP-ID 54352
Building Services Provider/Building Designer Ltd. (TAS)
License #484351416
EMAIL: veca@vecagroup.com
WEB: https://www.vecagroup.com

PROJECT	FITSTOP EARLWOOD 335 Homer Street Earlwood NSW 2206 (Approx. 218sqm)
DRAWING	TYPICAL DETAIL LCD SCREEN
DATE	16th April 2025
DESIGNED	EL
DRAWN	EB
SCALE	1/20 @ A2
PROJECT No.	FI.EA.3790
DRAWING No.	VECA_FIEA3790_ **118A**

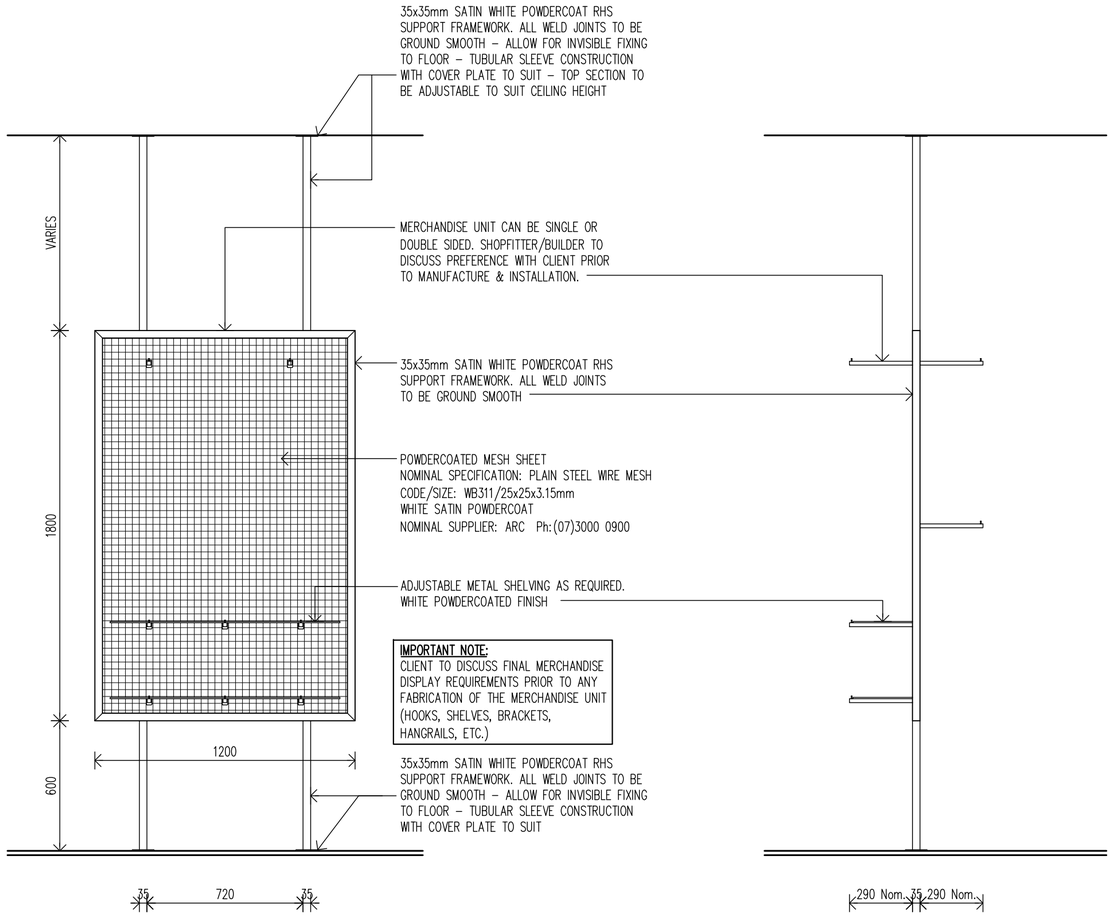

1 MERCHANDISE UNIT (TYPE B) – ELEVATION

1/20 @ A2

2 SIDE ELEVATION

1/20 @ A2

©2025 – THESE DESIGNS, DRAWINGS & SPECIFICATIONS ARE COPYRIGHT & CONFIDENTIAL AND THE PROPERTY OF VECA Group AND MUST NOT BE USED, REPRODUCED OR COPIED WHOLLY OR IN PART WITHOUT THE PERMISSION OF VECA Group. THESE DRAWINGS ARE DESIGN ONLY. SELECTED CONTRACTOR TO PRODUCE ITS OWN SHOP DRAWINGS FOR CONSTRUCTION.
ALL DIMENSIONS MUST BE CHECKED ON SITE BEFORE COMMENCEMENT OF CONSTRUCTION OR MANUFACTURING OF ANY ITEM. USE FIGURED DIMENSIONS IN PREFERENCE TO SCALED DIMENSIONS. ALL WORKS SHALL COMPLY WITH RELEVANT LOCAL HEALTH & COUNCIL REQUIREMENTS, LOCAL BUILDING REGULATIONS AND RELEVANT AUSTRALIAN CODES AND STANDARDS.
ANY DISCREPANCIES TO BE REPORTED TO VECA Group FOR CORRECTION PRIOR TO ANY WORK ON SITE.

ISSUE	AMENDMENTS	DATE
A	LANDLORD/CLIENT APPROVAL	16.04.2025

CLIENT:
FITSTOP.
FITSTOP Australia
51 Manilla Street
EAST BRISBANE QLD 4169
AUSTRALIA
Mobile: 0409 907 269 (Nicole Donohue)
EMAIL: nicole.donohue@fitstop.com

DESIGNER:
VECA Group
ABN 92 473 736 223
MOBILE: 0401 657 190 (Eric Lacour)
Registered Building Practitioner (VIC) - # CDP-ID 54352
Building Services Provider/Building Designer Ltd. (TAS)
License #484351416
EMAIL: veca@vecagroup.com
WEB: https://www.vecagroup.com

PROJECT	FITSTOP EARLWOOD 335 Homer Street Earlwood NSW 2206 (Approx. 218sqm)
DRAWING	TYPICAL DETAIL MERCHANDISE UNIT
DATE	16th April 2025
DESIGNED	EL
DRAWN	EB
SCALE	1/20 @ A2
PROJECT No.	FI.EA.3790
DRAWING No.	VECA_FIEA3790_ **119A**

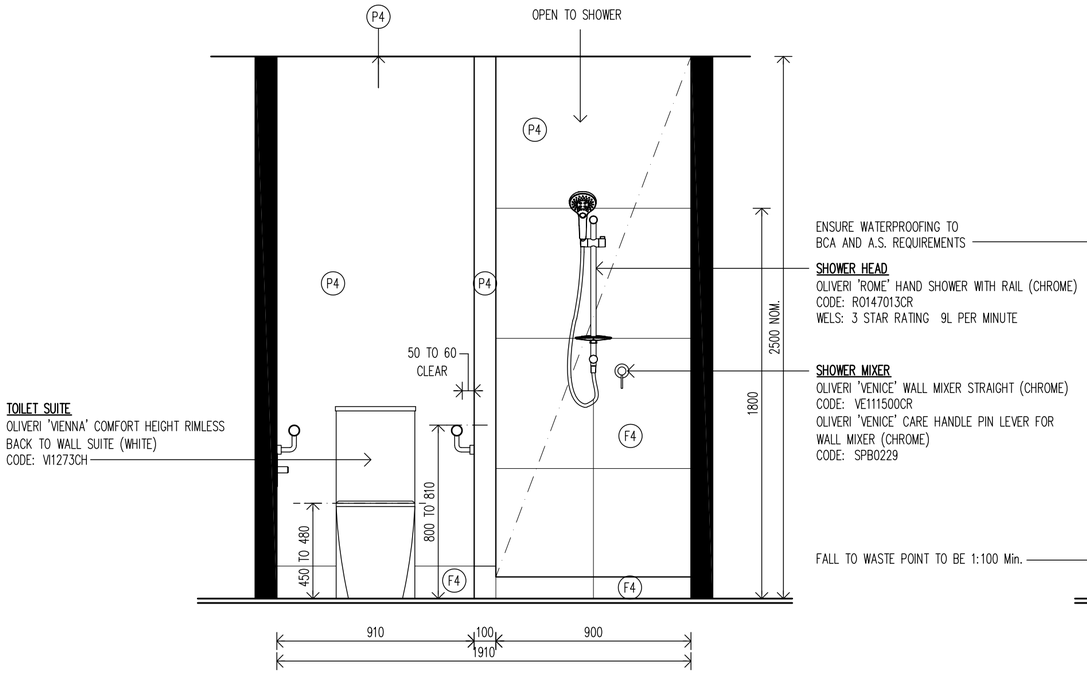

2 INTERNAL ELEVATION

1/20 @ A2

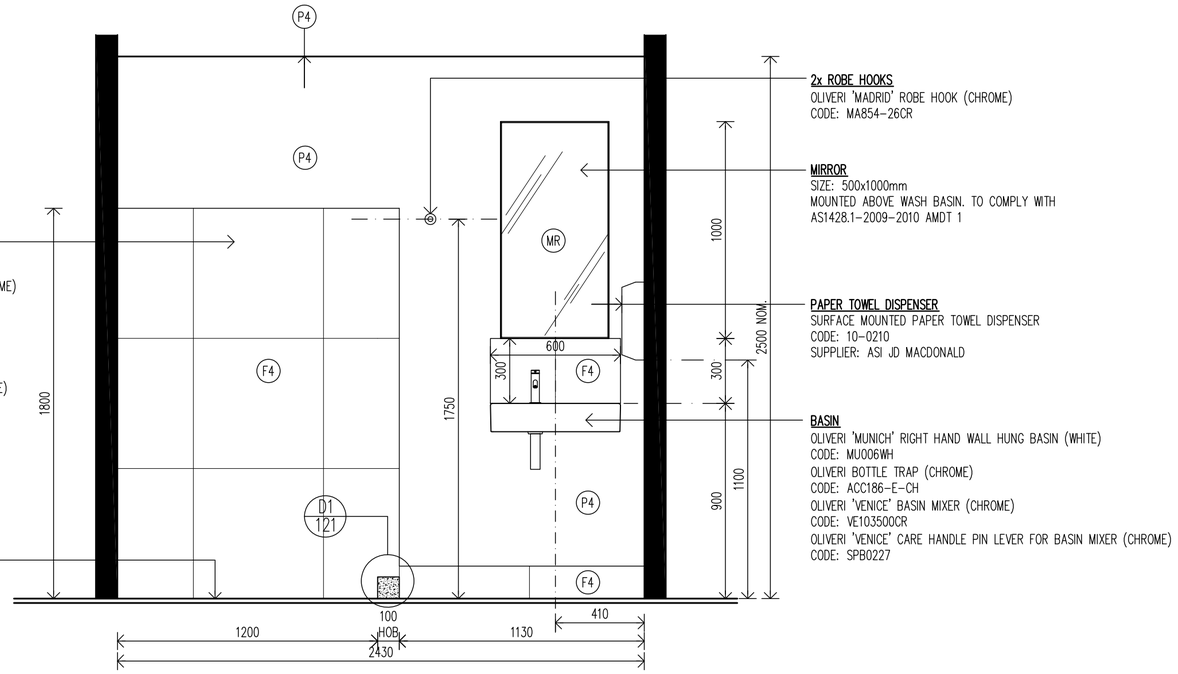

3 INTERNAL ELEVATION

1/20 @ A2

IMPORTANT NOTE:

6mm(THICK) VILLABOARD SHEETING TO ALL BATHROOM WALLS & PARTITIONS

AMENITIES DOORS SIGNAGE:

PROVIDE DOOR SIGNAGE TO BCA SECTIONS 15C1 THROUGH TO SECTION 15C6 & AS1428.1 AS FOLLOWS (OR SIMILAR APPROVED BY CERTIFIER):

- UNISEX ACCESSIBLE TOILET RH & SHOWER: (BTS35RHn-blk)
- UNISEX AMBULANT TOILET/SHOWER: (BTS232-blk)

SUPPLIER: BRAILLE TACTILE SIGNS (AUST)

- PH.: 1800 787 287

WEBSITE: WWW.BRAILLETACTILESIGNS.COM.AU

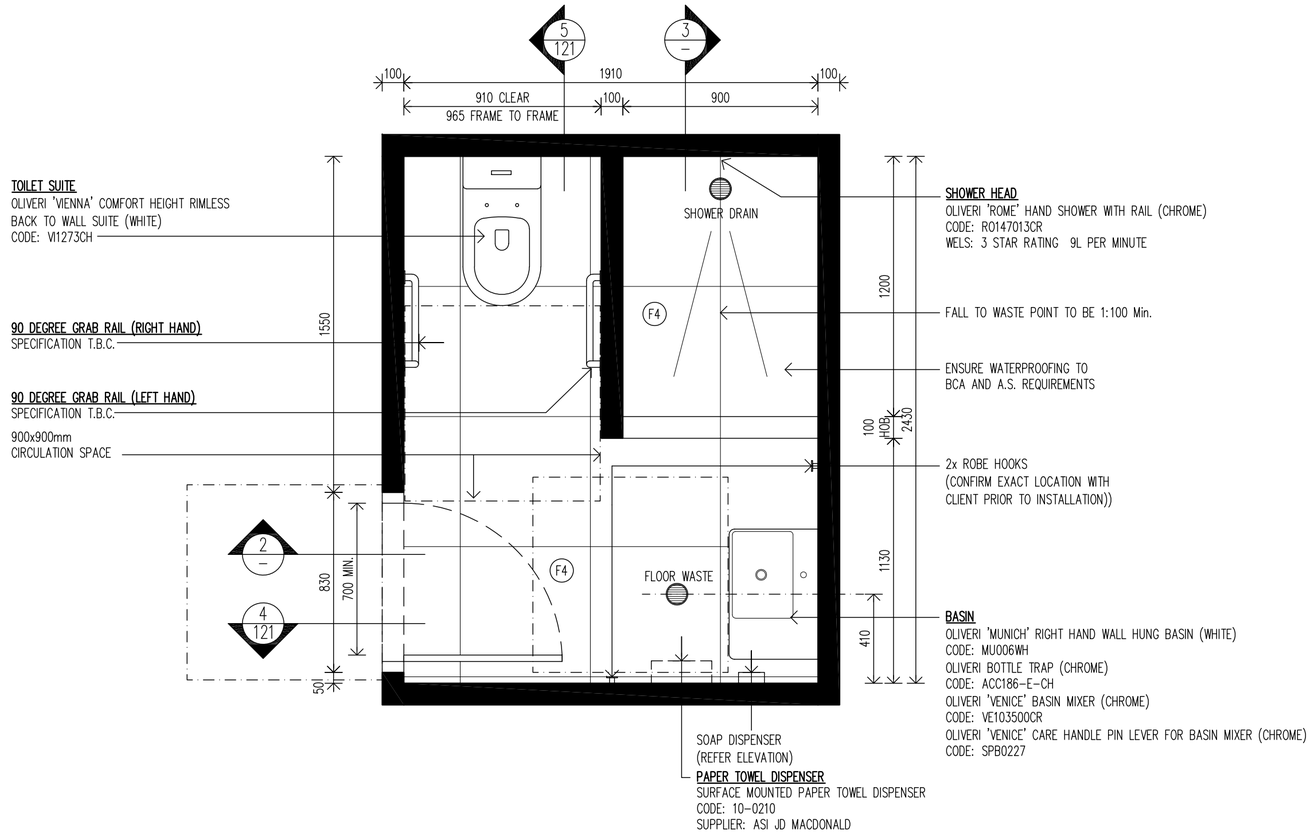

1 TYPICAL AMBULANT TOILET/SHOWER COMBO – FLOOR PLAN

1/20 @ A2

©2025 – THESE DESIGNS, DRAWINGS & SPECIFICATIONS ARE COPYRIGHT & CONFIDENTIAL AND THE PROPERTY OF VECA Group AND MUST NOT BE USED, REPRODUCED OR COPIED WHOLLY OR IN PART WITHOUT THE PERMISSION OF VECA Group. THESE DRAWINGS ARE DESIGN ONLY. SELECTED CONTRACTOR TO PRODUCE ITS OWN SHOP DRAWINGS FOR CONSTRUCTION.
ALL DIMENSIONS MUST BE CHECKED ON SITE BEFORE COMMENCEMENT OF CONSTRUCTION OR MANUFACTURING OF ANY ITEM. USE FIGURED DIMENSIONS IN PREFERENCE TO SCALED DIMENSIONS. ALL WORKS SHALL COMPLY WITH RELEVANT LOCAL HEALTH & COUNCIL REQUIREMENTS, LOCAL BUILDING REGULATIONS AND RELEVANT AUSTRALIAN CODES AND STANDARDS.
ANY DISCREPANCIES TO BE REPORTED TO VECA Group FOR CORRECTION PRIOR TO ANY WORK ON SITE.

ISSUE	AMENDMENTS	DATE
A	LANDLORD/CLIENT APPROVAL	16.04.2025

CLIENT:
FITSTOP.
FITSTOP Australia
51 Manilla Street
EAST BRISBANE QLD 4169
AUSTRALIA
Mobile: 0409 907 269 (Nicole Donohue)
EMAIL: nicole.donohue@fitstop.com

DESIGNER:
VECA Group
ABN 92 473 736 223
MOBILE: 0401 657 190 (Eric Lacour)
Registered Building Practitioner (VIC) - # CDP-ID 54352
Building Services Provider/Building Designer Ltd. (TAS)
License #484351416
EMAIL: veca@vecagroup.com
WEB: https://www.vecagroup.com

PROJECT	FITSTOP EARLWOOD 335 Homer Street Earlwood NSW 2206 (Approx. 218sqm)
DRAWING	TYP. AMBULANT TOILET SHOWER COMBO – 1 OF 2
DATE	16th April 2025
DESIGNED	EL
DRAWN	EB
SCALE	1/20 @ A2
PROJECT No.	FI.EA.3790
DRAWING No.	VECA_FIEA3790_ **120A**

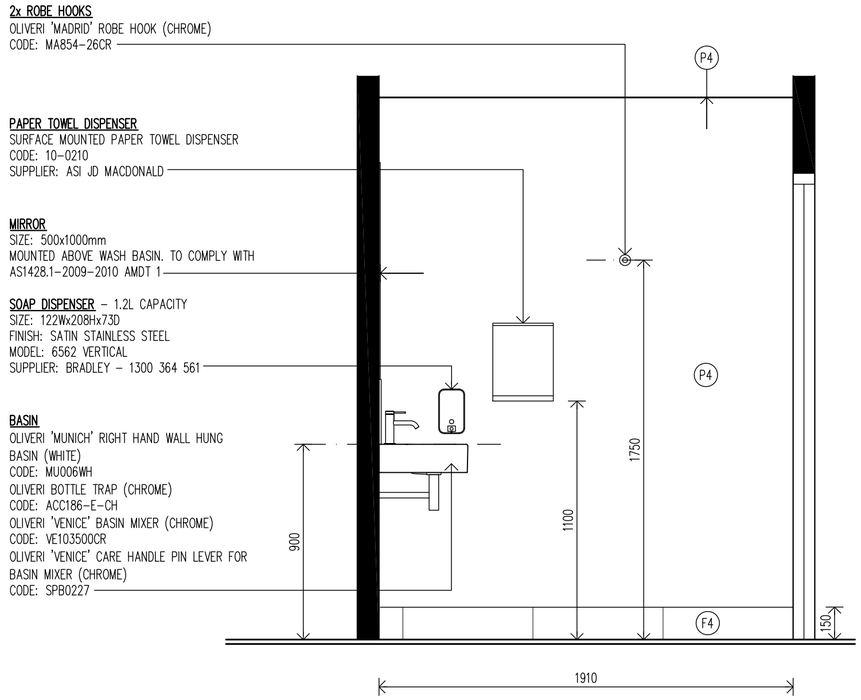

4 INTERNAL ELEVATION
1/20 @ A2

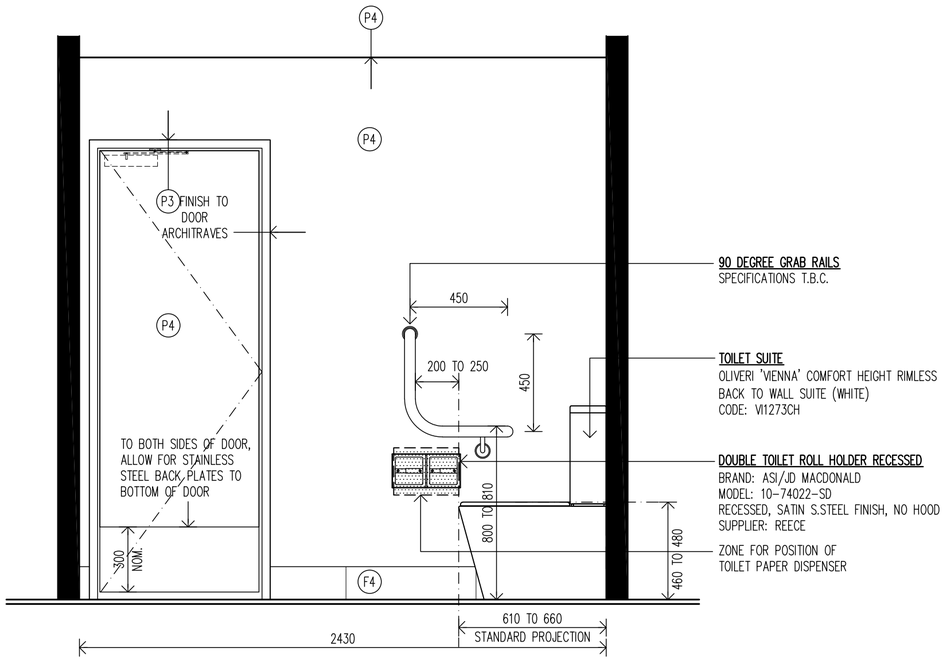

5 INTERNAL ELEVATION
1/20 @ A2

IMPORTANT NOTE:

6mm(THICK) VILLABOARD SHEETING TO ALL BATHROOM WALLS & PARTITIONS

AMENITIES DOORS SIGNAGE:

PROVIDE DOOR SIGNAGE TO BCA SECTIONS 15C1 THROUGH TO SECTION 15C6 & AS1428.1 AS FOLLOWS
(OR SIMILAR APPROVED BY CERTIFIER):
- UNISEX ACCESSIBLE TOILET RH & SHOWER: (BTS35RHn-blk)
- UNISEX AMBULANT TOILET/SHOWER: (BTS232-blk)

SUPPLIER: BRAILLE TACTILE SIGNS (AUST)
- PH.: 1800 787 287

WEBSITE: WWW.BRAILLETACTILESIGNS.COM.AU

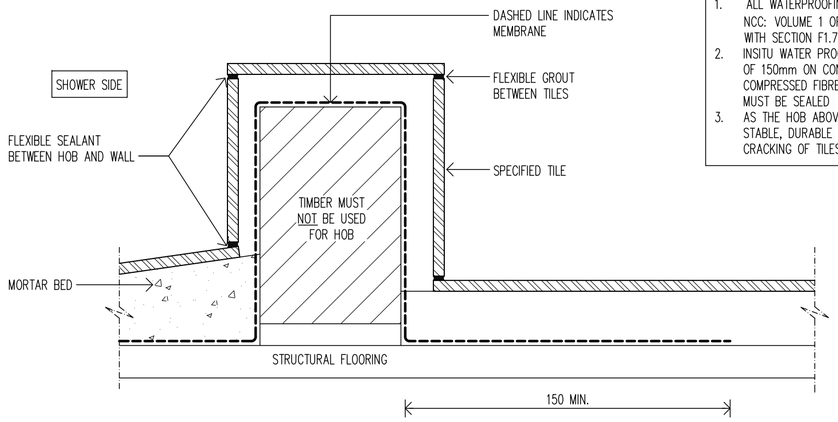

NOTES:
1. ALL WATERPROOFING/WET AREAS TO BE IN ACCORDANCE WITH THE NCC: VOLUME 1 OF THE NATIONAL CONSTRUCTION CODE (2019) AND WITH SECTION F1.7 OF THE AUSTRALIAN STANDARD AS3740-2010.
2. INSITU WATER PROOFING MUST CONTINUE PAST THE HOB FOR A MIN. OF 150mm ON CONCRETE. HOWEVER ON PARTICLE BOARD OR COMPRESSED FIBRE CEMENT OR PLYWOOD FLOORING THE FULL FLOOR MUST BE SEALED
3. AS THE HOB ABOVE IS ENCASED, THE CORE MAY BE OF ANY STABLE, DURABLE MATERIAL WITH SUFFICIENT STRENGTH TO PREVENT CRACKING OF TILES UNDER NORMAL HUMAN LOADING

D1 SHOWER HOB DETAILS
1/2 @ A2

©2025 - THESE DESIGNS, DRAWINGS & SPECIFICATIONS ARE COPYRIGHT & CONFIDENTIAL AND THE PROPERTY OF VECA Group AND MUST NOT BE USED, REPRODUCED OR COPIED WHOLLY OR IN PART WITHOUT THE PERMISSION OF VECA Group. THESE DRAWINGS ARE DESIGN ONLY. SELECTED CONTRACTOR TO PRODUCE ITS OWN SHOP DRAWINGS FOR CONSTRUCTION.
ALL DIMENSIONS MUST BE CHECKED ON SITE BEFORE COMMENCEMENT OF CONSTRUCTION OR MANUFACTURING OF ANY ITEM. USE FIGURED DIMENSIONS IN PREFERENCE TO SCALED DIMENSIONS. ALL WORKS SHALL COMPLY WITH RELEVANT LOCAL HEALTH & COUNCIL REQUIREMENTS, LOCAL BUILDING REGULATIONS AND RELEVANT AUSTRALIAN CODES AND STANDARDS.
ANY DISCREPANCIES TO BE REPORTED TO VECA Group FOR CORRECTION PRIOR TO ANY WORK ON SITE.

ISSUE	AMENDMENTS	DATE
A	LANDLORD/CLIENT APPROVAL	16.04.2025

CLIENT:
FITSTOP.
FITSTOP Australia
51 Manilla Street
EAST BRISBANE QLD 4169
AUSTRALIA
Mobile: 0409 907 269 (Nicole Donohue)
EMAIL: nicole.donohue@fitstop.com

DESIGNER:
VECA Group
ABN 92 473 736 223
MOBILE: 0401 657 190 (Eric Lacour)
Registered Building Practitioner (VIC) - # CDP-JD 54352
Building Services Provider/Building Designer Ltd. (TAS)
License #484351416
EMAIL: veca@vecagroup.com
WEB: https://www.vecagroup.com

PROJECT	FITSTOP EARLWOOD 335 Homer Street Earlwood NSW 2206 (Approx. 218sqm)
DRAWING	TYP. AMBULANT TOILET SHOWER COMBO - 2 OF 2
DATE	16th April 2025
DESIGNED	EL
DRAWN	EB
SCALE	1/20 @ A2
PROJECT No.	FI.EA.3790
DRAWING No.	VECA_FIEA3790_ 121A

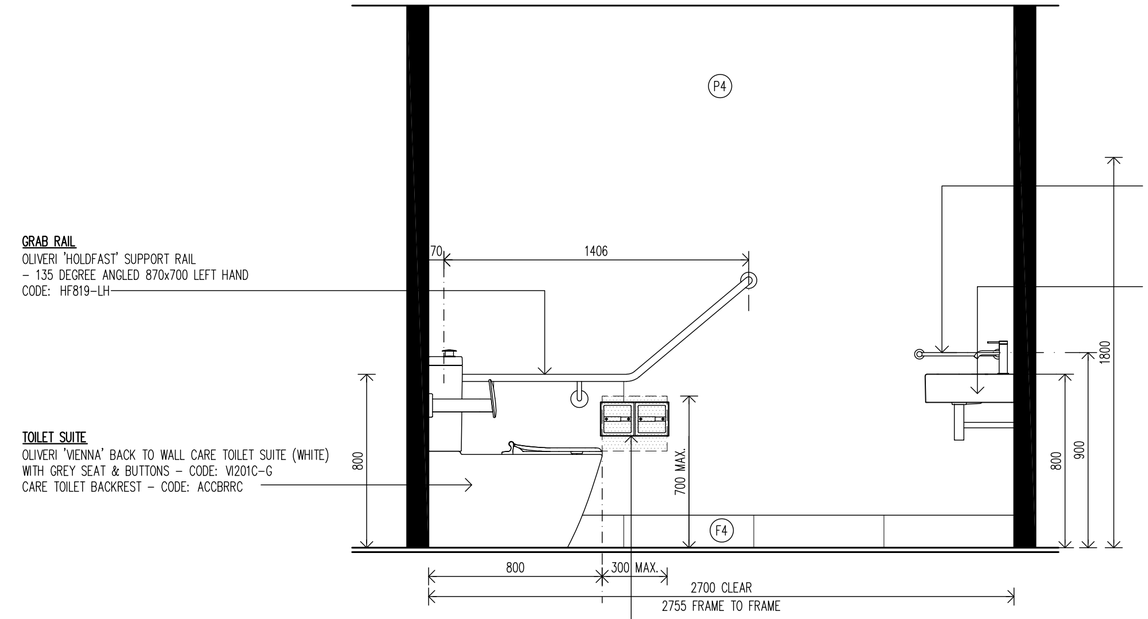

2 INTERNAL ELEVATION
1/20 @ A2

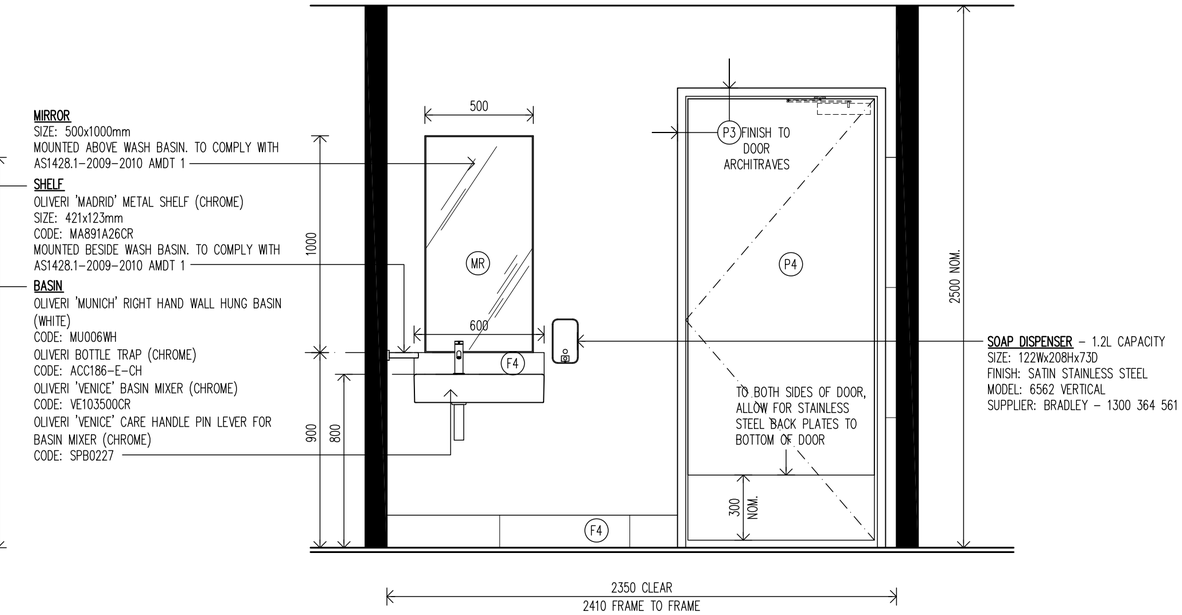

3 INTERNAL ELEVATION
1/20 @ A2

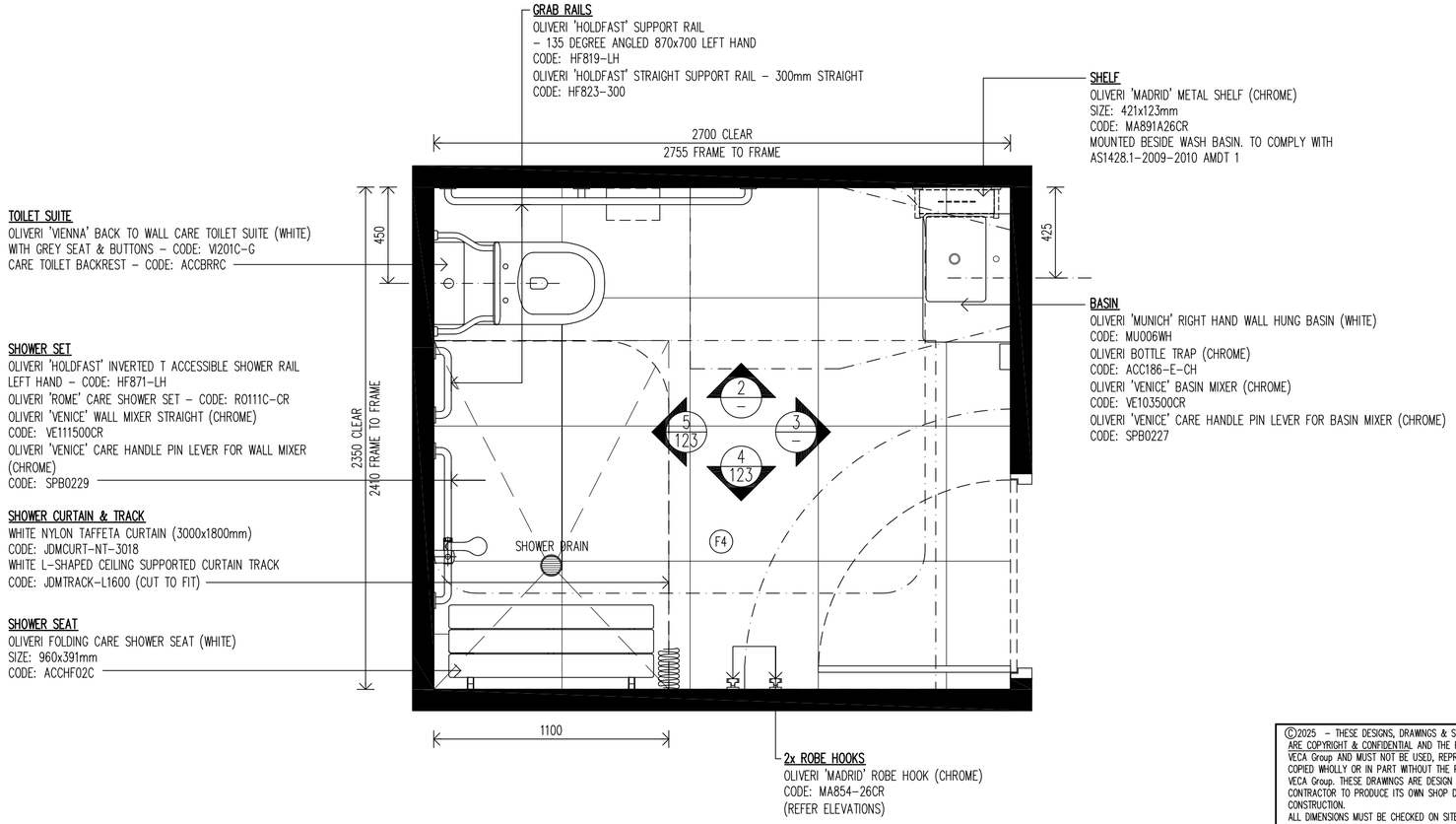

1 TYPICAL ACCESSIBLE TOILET/SHOWER COMBO – FLOOR PLAN
1/20 @ A2

IMPORTANT NOTE:

6mm(THICK) VILLABOARD SHEETING TO ALL BATHROOM WALLS & PARTITIONS

AMENITIES DOORS SIGNAGE:

PROVIDE DOOR SIGNAGE TO BCA SECTIONS 15C1 THROUGH TO SECTION 15C6 & AS1428.1 AS FOLLOWS
(OR SIMILAR APPROVED BY CERTIFIER):
– UNISEX ACCESSIBLE TOILET RH & SHOWER: (BTS35RHn–blk)
– UNISEX AMBULANT TOILET/SHOWER: (BTS232–blk)
SUPPLIER: BRAILLE TACTILE SIGNS (AUST)
– PH.: 1800 787 287
WEBSITE: WWW.BRAILLETACTILESIGNS.COM.AU

©2025 – THESE DESIGNS, DRAWINGS & SPECIFICATIONS ARE COPYRIGHT & CONFIDENTIAL AND THE PROPERTY OF VECA Group AND MUST NOT BE USED, REPRODUCED OR COPIED WHOLLY OR IN PART WITHOUT THE PERMISSION OF VECA Group. THESE DRAWINGS ARE DESIGN ONLY. SELECTED CONTRACTOR TO PRODUCE ITS OWN SHOP DRAWINGS FOR CONSTRUCTION.
ALL DIMENSIONS MUST BE CHECKED ON SITE BEFORE COMMENCEMENT OF CONSTRUCTION OR MANUFACTURING OF ANY ITEM. USE FIGURED DIMENSIONS IN PREFERENCE TO SCALED DIMENSIONS. ALL WORKS SHALL COMPLY WITH RELEVANT LOCAL HEALTH & COUNCIL REQUIREMENTS, LOCAL BUILDING REGULATIONS AND RELEVANT AUSTRALIAN CODES AND STANDARDS.
ANY DISCREPANCIES TO BE REPORTED TO VECA Group FOR CORRECTION PRIOR TO ANY WORK ON SITE.

ISSUE	AMENDMENTS	DATE
A	LANDLORD/CLIENT APPROVAL	16.04.2025

CLIENT:
FITSTOP.
FITSTOP Australia
51 Manilla Street
EAST BRISBANE QLD 4169
AUSTRALIA
Mobile: 0409 907 269 (Nicole Donohue)
EMAIL: nicole.donohue@fitstop.com

DESIGNER:
VECA Group
ABN 92 473 736 223
MOBILE: 0401 657 190 (Eric Lacour)
Registered Building Practitioner (VIC) - # CDP-ID 54352
Building Services Provider/Building Designer Ltd. (TAS)
License #484351416
EMAIL: veca@vecagroup.com
WEB: https://www.vecagroup.com

PROJECT	FITSTOP EARLWOOD 335 Homer Street Earlwood NSW 2206 (Approx. 218sqm)
DRAWING	TYP. ACCESSIBLE TOILET/ SHOWER COMBO – 1 OF 2
DATE	16th April 2025
DESIGNED	EL
DRAWN	EB
SCALE	1/20 @ A2
PROJECT No.	FI.EA.3790
DRAWING No.	VECA_FIEA3790_ 122A

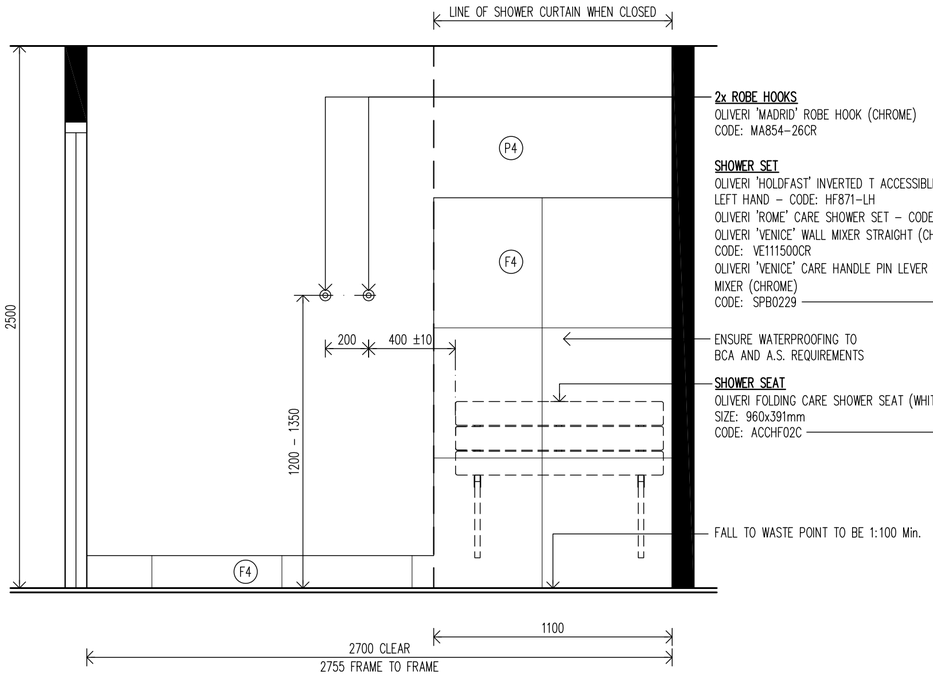

4 INTERNAL ELEVATION
1/20 @ A2

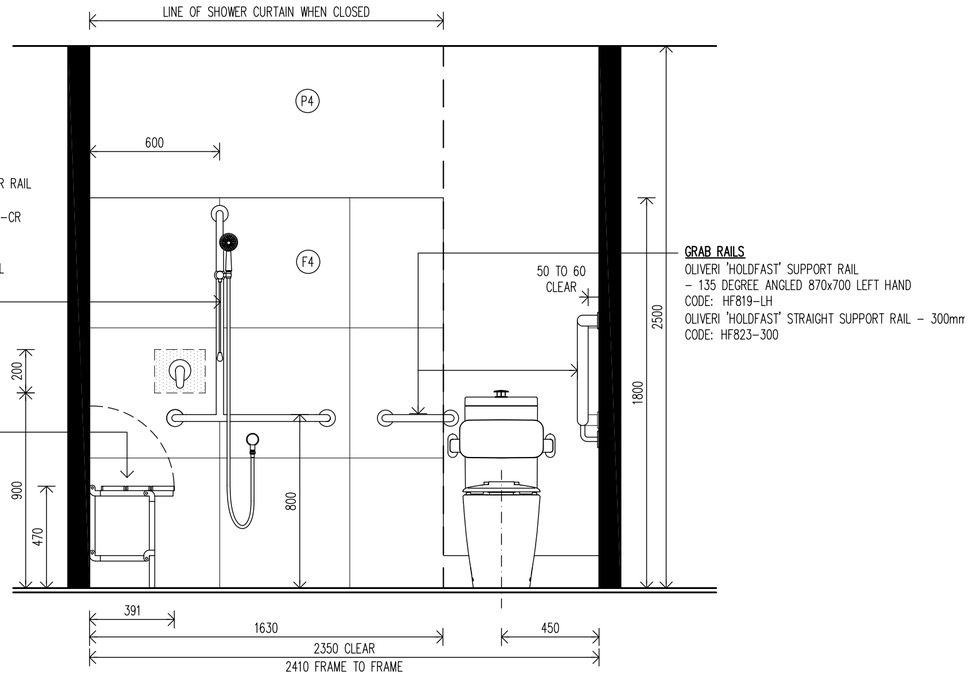

5 INTERNAL ELEVATION
1/20 @ A2

©2025 - THESE DESIGNS, DRAWINGS & SPECIFICATIONS ARE COPYRIGHT & CONFIDENTIAL AND THE PROPERTY OF VECA Group AND MUST NOT BE USED, REPRODUCED OR COPIED WHOLLY OR IN PART WITHOUT THE PERMISSION OF VECA Group. THESE DRAWINGS ARE DESIGN ONLY. SELECTED CONTRACTOR TO PRODUCE ITS OWN SHOP DRAWINGS FOR CONSTRUCTION.
ALL DIMENSIONS MUST BE CHECKED ON SITE BEFORE COMMENCEMENT OF CONSTRUCTION OR MANUFACTURING OF ANY ITEM. USE FIGURED DIMENSIONS IN PREFERENCE TO SCALED DIMENSIONS. ALL WORKS SHALL COMPLY WITH RELEVANT LOCAL HEALTH & COUNCIL REQUIREMENTS, LOCAL BUILDING REGULATIONS AND RELEVANT AUSTRALIAN CODES AND STANDARDS.
ANY DISCREPANCIES TO BE REPORTED TO VECA Group FOR CORRECTION PRIOR TO ANY WORK ON SITE.

ISSUE	AMENDMENTS	DATE
A	LANDLORD/CLIENT APPROVAL	16.04.2025

CLIENT:
FITSTOP.
FITSTOP Australia
51 Manilla Street
EAST BRISBANE QLD 4169
AUSTRALIA
Mobile: 0409 907 269 (Nicole Donohue)
EMAIL: nicole.donohue@fitstop.com

DESIGNER:
VECA Group
ABN 92 473 736 223
MOBILE: 0401 657 190 (Eric Lacour)
Registered Building Practitioner (VIC) - # CDP-ID 54352
Building Services Provider/Building Designer Ltd. (TAS)
License #484351416
EMAIL: veca@vecagroup.com
WEB: https://www.vecagroup.com

PROJECT	FITSTOP EARLWOOD 335 Homer Street Earlwood NSW 2206 (Approx. 218sqm)
DRAWING	TYP. ACCESSIBLE TOILET/ SHOWER COMBO - 2 OF 2
DATE	16th April 2025
DESIGNED	EL
DRAWN	EB
SCALE	1/20 @ A2
PROJECT No.	FLEA_3790
DRAWING No.	VECA_FIEA3790_ **123A**